3.7V Lithium Polymer Battery Data Sheet

Model: 552460

Please Find More:

https://www.fpbattery.com/3-7v-750mah-lithium-polymer-battery/

File Number: A/FP2460-22322

File Version: 01

CONTACT

CUSTOMER SERVICE
86.755.3682.7358
sales@fpbattery.com
Hours of Operation:
9:00am-6:00pm CST, Monday to Friday

LEARN MORE ON:
https://www.fpbattery.com/

DNK POWER COMPANY LIMITED

BATTERY SPECIFICATION

Part Number	DNK 552460
Nominal Voltage	3.7 V
Nominal Capacity	790 mAh
Internal Impedence	<60mΩ
Charge Voltage	4.2V
Recommended Charge Current	0.2 C
Allowed Max Charge Current	0.5 C
Output Voltage Range	4.2 - 2.5 V
Recommended Discharge Current	0.2 C
Max Continuous Discharge Current	1 C
Pulse Discharge Current	3 C (10 mS)
Discharge Cut-off Voltage	2.5± 0.05V
Cycle Life to 80% Health	500 (0.2C, 25°C)

1

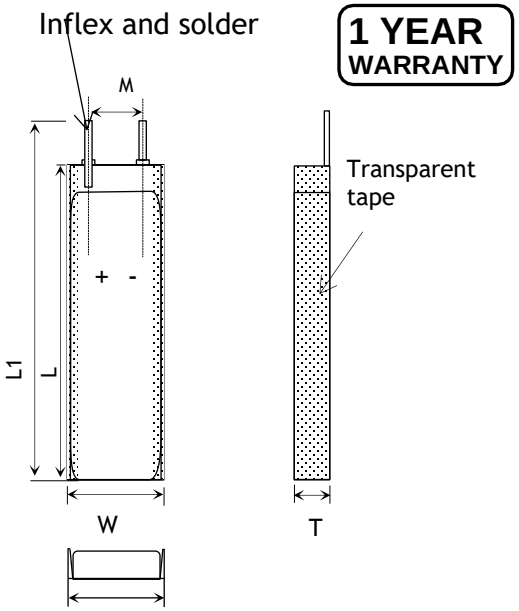

Item	Parameter (mm)
T	5
W	24
M	10
L	60
L_1	62
BL	62 ± 1
CL	100

ENVIRONMENTAL SPECIFICATIONS

Charging Temperature Range	0 - 45°C
Discharging Temperature Range	-20 - 60°C
Storage Period 1 Week	-20 - 45°C
Storage Period 1 Month	-10 - 45°C
Storage Period 6 Months	0 - 35°C

BATTERY PROTECTION

Over Charge	4.275 ± 50mV
Over Discharge	2.5V ± 50mV
Over Current	3A to 5A
Short Circuit	Yes

MECHANICAL SPECIFICATIONS

Dimensions	62x 24 x 5 mm(L*W*T)
Weight	13 g
Battery Terminals	WC/ FL *

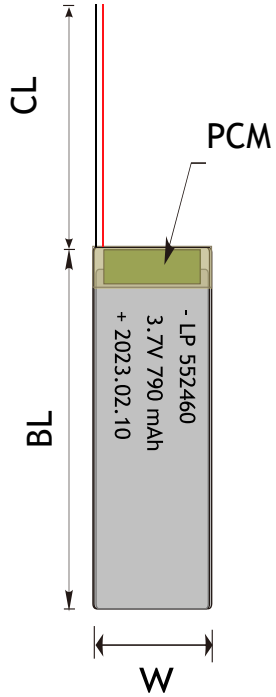

CERTIFICATION

Certification Approval	PLEASE CONSULT SALES

* WC=With Connector FL=Flying Leads UWP=Blue Wrapped PVC
BWP=Black Wrapped PVC BC= Bare Cell

BULK PRODUCTION ACTUAL PICTURES



BARE CELL (BC)



FLYING LEADS (FL)



WITH CONNECTOR (WC)



BLUE WRAPPED PVC (UWP)



BLACK WRAPPED PVC (BWP)

3.7V LIPO BATTERY OPTIONS



Special Ingredients to make batteries work from -40 -85 ° C



Discharging Current up to 100C



Popular JST,Molex,Hirose,Anderson available



LED Power Indicator



Power Button



Upgrade to LifePo4 tech and life circle up to 1500

RELATIVE CURVES

Charge & Discharge Characteriestics in different Rate@25℃

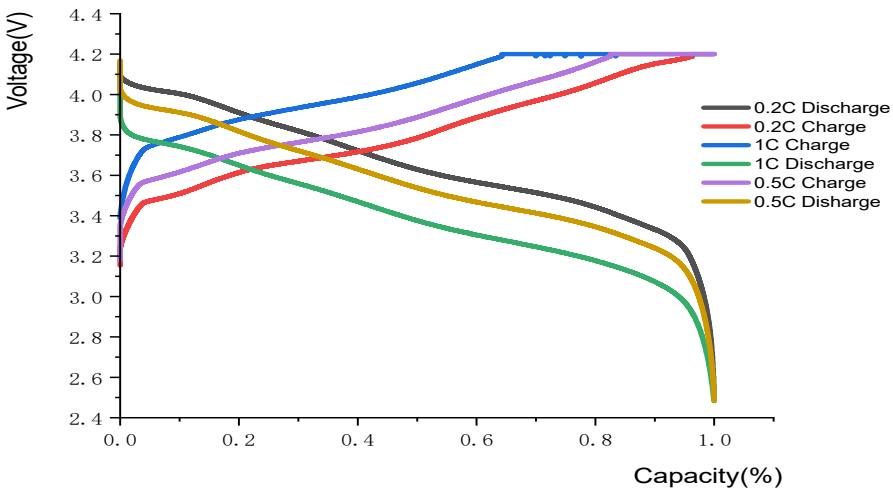

Discharge Characteriestics Curve in Different Rate@25℃

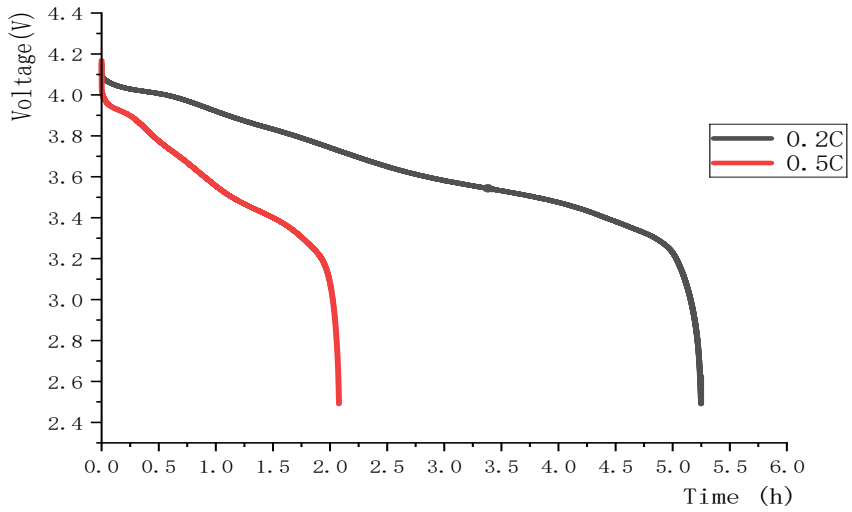

ANNOUNCEMENT

- Never charge Batteries inside of the model.
- Do not attempt to disassemble or repair the battery.
- In the event of a crash, remove battery(s) and place it/them in a safe open area away from any combustible materials for approximately 30 minutes. On no account should you place it in a vehicle for at least 30 minutes as a delayed chemical re-action can occur causing a fire.
- Do not place the battery in a microwave or other heating device.
- Check cell voltage after the first charge to verify that the voltage has not exceeded the maximum charge voltage (Please refer to Chart 1). Check the voltage of each cell via the balance connector to verify that the voltage of each cell has not exceeded the maximum value.
- NEVER charge a Li-ion or LiPo battery overnight and unattended.
- Never keep sharp objects near Lipos. This may cause a hole in the pack and can lead to a fire.
- Never charge the battery at a current exceeding 2C (2 x the capacity of the battery). A higher charge rate may cause fire.
- ALWAYS close the door to the room or space.
- Do not leave Lipo batteries unattended while charging.
- Prevent arcing by turning the charger off before disconnecting the battery.