3.7V Lithium Polymer Battery Data Sheet

Model: 552050

Please Find More:

https://www.fpbattery.com/3-7v-500mah-lithium-polymer-battery/

File Number: A/FP2050-22335

File Version: 01

CONTACT

CUSTOMER SERVICE
86.755.3682.7358
sales@fpbattery.com
Hours of Operation:
9:00am-6:00pm CST, Monday to Friday

LEARN MORE ON:
https://www.fpbattery.com/

DNK POWER COMPANY LIMITED

BATTERY SPECIFICATION

Part Number	DNK 552050
Nominal Voltage	3.7 V
Nominal Capacity	550 mAh
Internal Impedence	<60mΩ
Charge Voltage	4.2V
Recommended Charge Current	0.2 C
Allowed Max Charge Current	0.5 C
Output Voltage Range	4.2 - 2.5 V
Recommended Discharge Current	0.2 C
Max Continuous Discharge Current	1 C
Pulse Discharge Current	3 C (10 mS)
Discharge Cut-off Voltage	2.5± 0.05V
Cycle Life to 80% Health	500 (0.2C, 25°C)

1

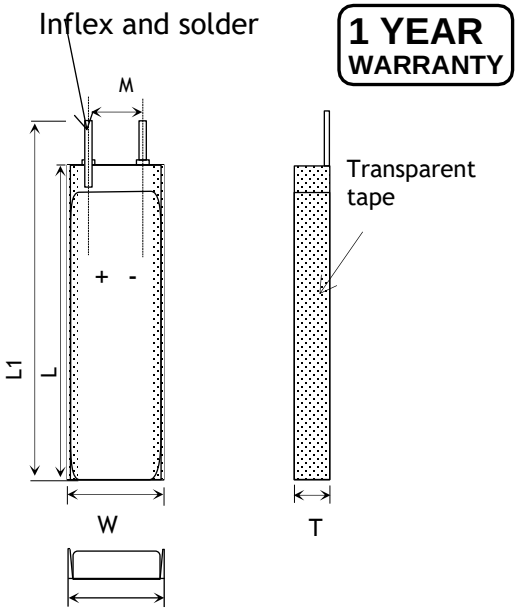

Item	Parameter (mm)
T	5
W	20
M	10
L	50
L_1	52
BL	52 ± 1
CL	100

ENVIRONMENTAL SPECIFICATIONS

Charging Temperature Range	0 - 45°C
Discharging Temperature Range	-20 - 60°C
Storage Period 1 Week	-20 - 45°C
Storage Period 1 Month	-10 - 45°C
Storage Period 6 Months	0 - 35°C

BATTERY PROTECTION

Over Charge	4.275 ± 50mV
Over Discharge	2.5V ± 50mV
Over Current	3A to 5A
Short Circuit	Yes

MECHANICAL SPECIFICATIONS

Dimensions	52x 20 x 5 mm(L*W*T)
Weight	9 g
Battery Terminals	WC/ FL *

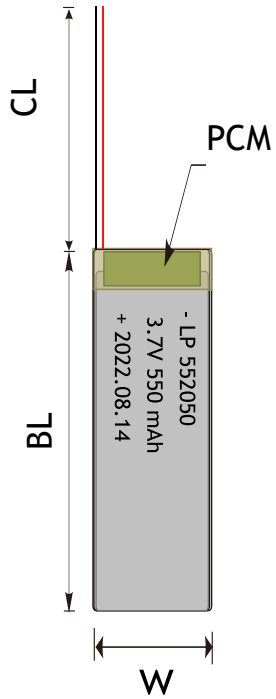

CERTIFICATION

Certification Approval	PLEASE CONSULT SALES

* WC=With Connector FL=Flying Leads UWP=Blue Wrapped PVC
BWP=Black Wrapped PVC BC= Bare Cell

BULK PRODUCTION ACTUAL PICTURES



BARE CELL (BC)



FLYING LEADS (FL)



WITH CONNECTOR (WC)



BLUE WRAPPED PVC (UWP)



BLACK WRAPPED PVC (BWP)

3.7V LIPO BATTERY OPTIONS



Special Ingredients to make batteries work from -40 -85 ° C



Discharging Current up to 100C



Popular JST,Molex,Hirose,Anderson available



LED Power Indicator



Power Button



Upgrade to LifePo4 tech and life circle up to 1500

RELATIVE CURVES

Charge & Discharge Characteriestics in different Rate@25℃

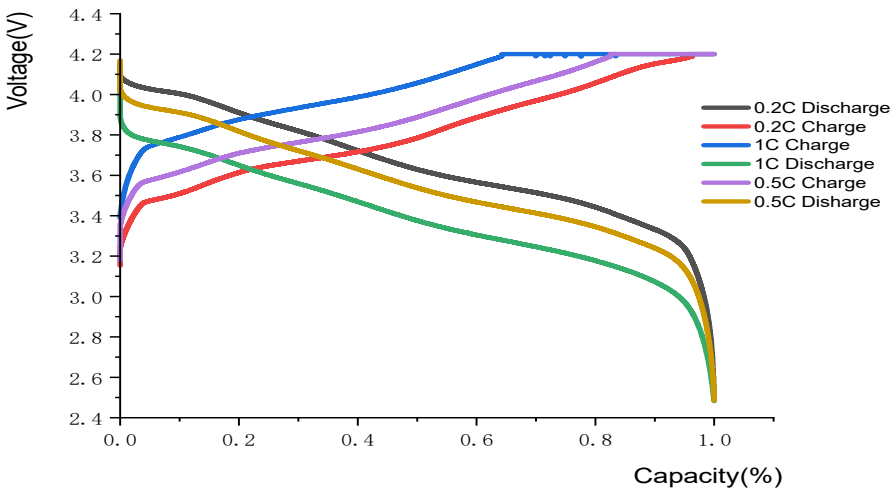

Discharge Characteriestics Curve in Different Rate@25℃

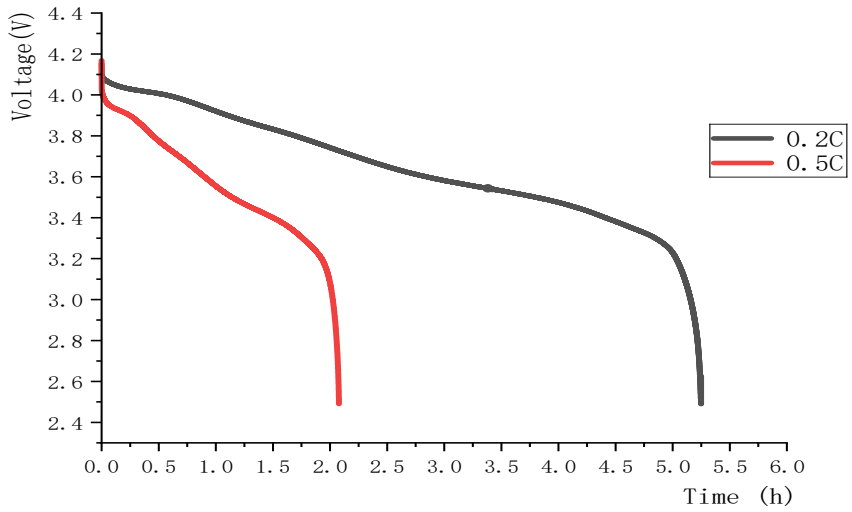

ANNOUNCEMENT

- Slow down the charging and discharging rate of the battery in low temperature environment.
- l When charging LiPo batteries, they must be charged at the voltage of the number of cells in series. Example: A 5s4p pack must be charged as a 5 cell pack.
- Do not store LiPo batteries in extreme temperatures below 0C or above 50C.
- If the battery swells during charging, stop charging immediately and disconnect the battery from the charger. Leave the battery outside for a few hours and observe. Then recycle the battery according to the instructions of your country/region.
- Misuse of a Lipo battery may result in the battery generating excessive heat, igniting or exploding. Keep batteries out of the reach of children.
- It is essential to observe the polarity. Reverse polarity (POSITIVE and NEGATIVE) will damage the cells, cause the battery to swell and can damage your charger.
- Do not crush or bend the battery.
- Use a reliable power adapter to avoid unstable current output.
- Do not use a damaged charger that could cause the battery to overcharge or over discharge.
- Use lithium battery safety bags/containers during charging.
- Use low voltage cutoff switch or monitor battery voltage while in use on equipment. Do not allow voltage to drop below 3.0 volts.