3.7V Lithium Polymer Battery Data Sheet

Model: 502767

Please Find More:

https://www.fpbattery.com/3-7v-5500mah-lithium-polymer-battery/

File Number: A/FP2767-22249

File Version: 01

CONTACT

CUSTOMER SERVICE
86.755.3682.7358
sales@fpbattery.com
Hours of Operation:
9:00am-6:00pm CST, Monday to Friday

LEARN MORE ON:
https://www.fpbattery.com/

DNK POWER COMPANY LIMITED

BATTERY SPECIFICATION

Part Number	DNK 502767
Nominal Voltage	3.7 V
Nominal Capacity	905 mAh
Internal Impedence	<60mΩ
Charge Voltage	4.2V
Recommended Charge Current	0.2 C
Allowed Max Charge Current	0.5 C
Output Voltage Range	4.2 - 2.5 V
Recommended Discharge Current	0.2 C
Max Continuous Discharge Current	1 C
Pulse Discharge Current	3 C (10 mS)
Discharge Cut-off Voltage	2.5± 0.05V
Cycle Life to 80% Health	500 (0.2C, 25°C)

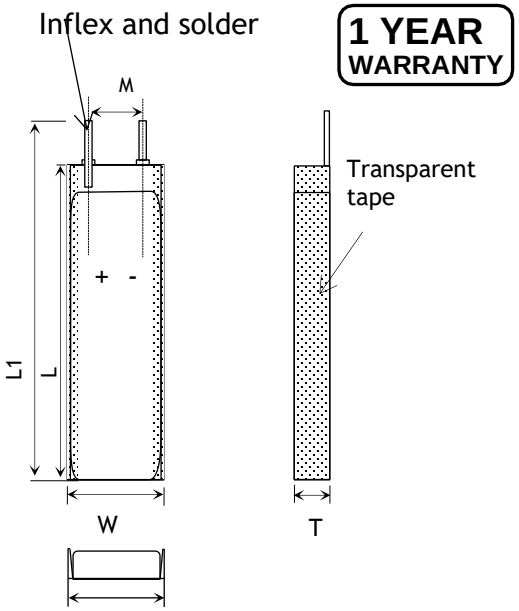

Item	Parameter (mm)
T	5
W	27
M	10
L	67
L_1	69
BL	69 ± 1
CL	100

ENVIRONMENTAL SPECIFICATIONS

Charging Temperature Range	0 - 45°C
Discharging Temperature Range	-20 - 60°C
Storage Period 1 Week	-20 - 45°C
Storage Period 1 Month	-10 - 45°C
Storage Period 6 Months	0 - 35°C

BATTERY PROTECTION

Over Charge	4.275 ± 50mV
Over Discharge	2.5V ± 50mV
Over Current	3A to 5A
Short Circuit	Yes

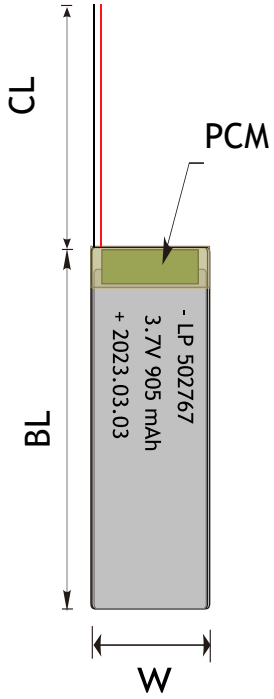

MECHANICAL SPECIFICATIONS

Dimensions	69x 27 x 5 mm(L*W*T)
Weight	15 g
Battery Terminals	WC/ FL *

CERTIFICATION

Certification Approval	PLEASE CONSULT SALES

* WC=With Connector FL=Flying Leads UWP=Blue Wrapped PVC BWP=Black Wrapped PVC BC= Bare Cell

BULK PRODUCTION ACTUAL PICTURES



BARE CELL (BC)



FLYING LEADS (FL)



WITH CONNECTOR (WC)



BLUE WRAPPED PVC (UWP)



BLACK WRAPPED PVC (BWP)

3.7V LIPO BATTERY OPTIONS

Special Ingredients to make batteries work from -40 -85 ° C

Discharging Current up to 100C

Popular JST,Molex,Hirose,Anderson available

LED Power Indicator

Power Button

Upgrade to LifePo4 tech and life circle up to 1500

RELATIVE CURVES

Charge & Discharge Characteriestics in different Rate@25℃

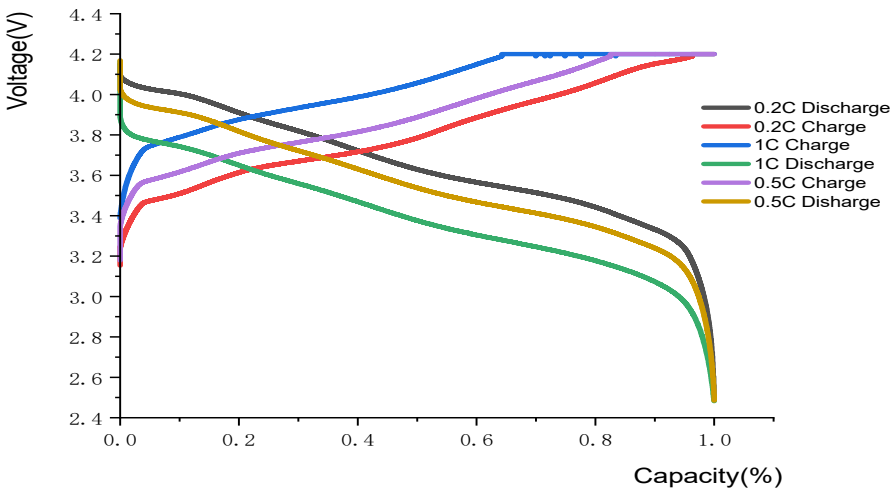

Discharge Characteriestics Curve in Different Rate@25℃

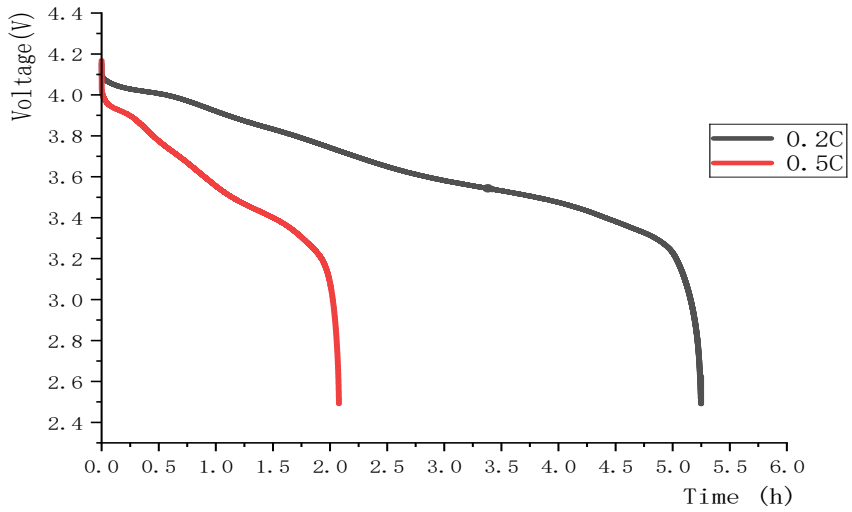

ANNOUNCEMENT

- Immediately disconnect the batteries if, during operation or charging, they emit an unusual smell, develop heat, change shape/geometry, or behave abnormally.
- Do not 'peak charge' or 'top off' Lipo batteries always remove Lipo batteries from a charger once they are charged.
- Reacting and leaking batteries are considered hazardous waste. Please consult Emergency Procedures below.
- LiPo safe bags help contain heat and flames that results if a Li-Ion battery combusts during charging or while in storage.
- When the battery is empty, recharge it immediately. Do not store an empty battery, the battery will continue to discharge, it will fall below the minimum voltage and become unusable.
- If you plan not to use your LiPo cells for an extended period (more then 4 days) then use the "Storage" setting on your charger. If your charger does not have this feature then don't use it and invest in one that does.
- Avoid changing the battery frequently during use.
- If you have dropped or damageda LiPo battery in anyway, do not attempt to charge it.
- Short circuits may cause fire and injury! If you plan to cut the battery's terminal wires, you must cut each wire individually, making sure the wires not to touch each other. Otherwise, a short circuit may occur and potentially cause a fire. If you accidentally cause the battery to short circuit, place it in a safe space and observe it for at least 15 minutes. The battery may swell or possibly catch fire during this time. Additionally, the powerful electric current may cause severe injuries if the battery leads come in contact with rings or jewelry. Dispose of used or damaged LiPo batteries at your local Hazardous Waste Facility or Recycling Center.
- Manually check the temperature of your LiPo battery pack constantly during charging. LiPo cells should never rise above ambient temperature when being charged.

- Avoid using chargers with long charging times.