3.7V Lithium Polymer Battery Data Sheet

Model: 403482

Please Find More:

https://www.fpbattery.com/3-7v-1100mah-lithium-polymer-battery/

File Number: A/FP3482-21838

File Version: 01

CONTACT

CUSTOMER SERVICE
86.755.3682.7358
sales@fpbattery.com
Hours of Operation:
9:00am-6:00pm CST, Monday to Friday

LEARN MORE ON:
https://www.fpbattery.com/

DNK POWER COMPANY LIMITED

BATTERY SPECIFICATION

Part Number	DNK 403482
Nominal Voltage	3.7 V
Nominal Capacity	1100 mAh
Internal Impedence	<60mΩ
Charge Voltage	4.2V
Recommended Charge Current	0.2 C
Allowed Max Charge Current	0.5 C
Output Voltage Range	4.2 - 2.5 V
Recommended Discharge Current	0.2 C
Max Continuous Discharge Current	1 C
Pulse Discharge Current	3 C (10 mS)
Discharge Cut-off Voltage	2.5± 0.05V
Cycle Life to 80% Health	500 (0.2C, 25°C)

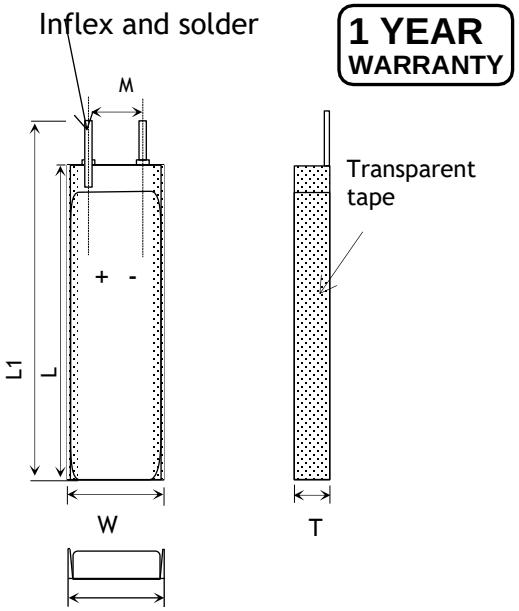

Item	Parameter (mm)
T	4
W	34
M	10
L	82
L_1	84
BL	84 ± 1
CL	100

ENVIRONMENTAL SPECIFICATIONS

Charging Temperature Range	0 - 45°C
Discharging Temperature Range	-20 - 60°C
Storage Period 1 Week	-20 - 45°C
Storage Period 1 Month	-10 - 45°C
Storage Period 6 Months	0 - 35°C

BATTERY PROTECTION

Over Charge	4.275 ± 50mV
Over Discharge	2.5V ± 50mV
Over Current	3A to 5A
Short Circuit	Yes

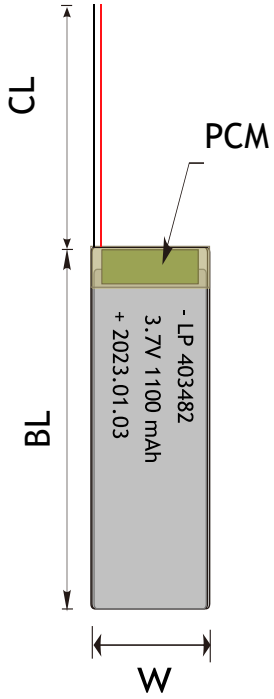

MECHANICAL SPECIFICATIONS

Dimensions	84x 34 x 4 mm(L*W*T)
Weight	18 g
Battery Terminals	WC/ FL *

CERTIFICATION

Certification Approval	PLEASE CONSULT SALES

* WC=With Connector FL=Flying Leads UWP=Blue Wrapped PVC BWP=Black Wrapped PVC BC= Bare Cell

BULK PRODUCTION ACTUAL PICTURES



BARE CELL (BC)



FLYING LEADS (FL)



WITH CONNECTOR (WC)



BLUE WRAPPED PVC (UWP)



BLACK WRAPPED PVC (BWP)

3.7V LIPO BATTERY OPTIONS

Special Ingredients to make batteries work from -40 -85 ° C

Discharging Current up to 100C

Popular JST,Molex,Hirose,Anderson available

LED Power Indicator

Power Button

Upgrade to LifePo4 tech and life circle up to 1500

RELATIVE CURVES

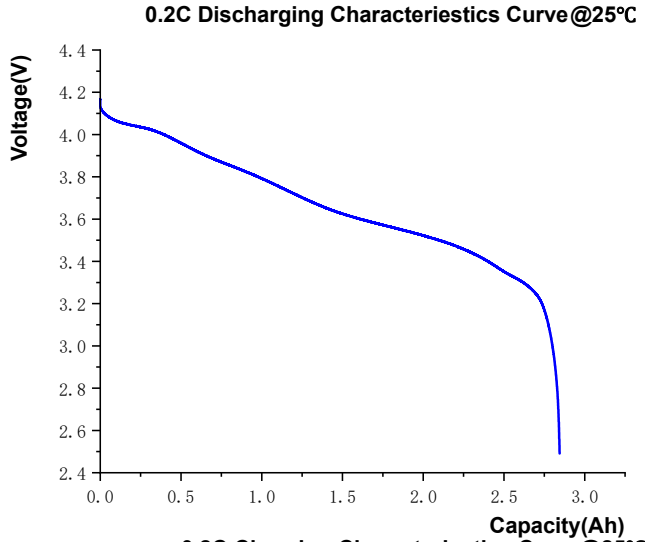

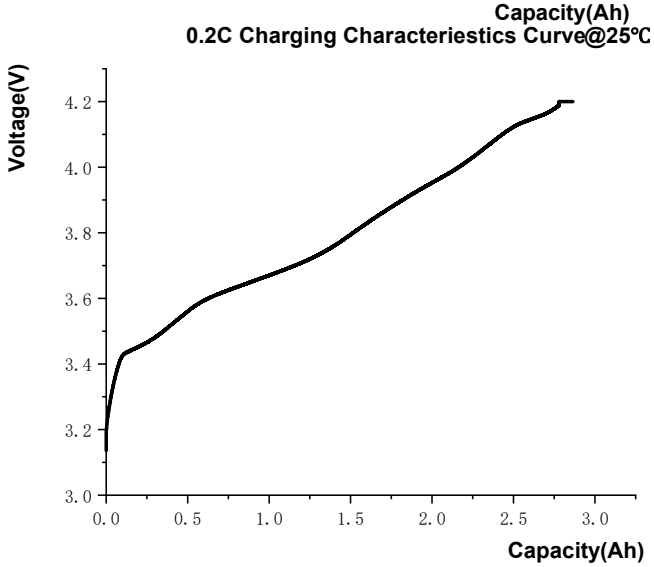

ANNOUNCEMENT

- Never discharge Batteries at amperage rates higher than specified on Batteries' labels
- Avoid restarting the device frequently on the way to using the battery.
- Only charge LiPo batteries with chargers specifically designed to charge LiPo batteries. NEVER use a NiMH or NiCd charger! Failure to use a proper charger might cause a fire resulting in personal injury and/or property damage. Some LiPo chargers on the market may have technical deficiencies which may result in incorrect charging or charging at an improper rate. It is your responsibility to determine that your charger works properly.
- Stop using or charging the battery immediately if the battery becomes or appears damaged, gives off an odor, becomes discolored or deformed, starts to balloon or swell, leaks, exceeds a temperature of 160°F (71°C), or if any other abnormality is detected. Disconnect the battery and observe it in a safe area outside of any building or vehicle and away from any combustible materials. These abnormalities may cause the battery to leak, and the reaction with air may cause the chemical materials inside to ignite. Because delayed chemical reactions may occur (a battery can still ignite even after 10 minutes), you should continue observing the battery for at least 15 minutes as a safety precaution.
- Prevent arcing by turning the charger off before disconnecting the battery.
- ALWAYS evacuate the building to your unit's designated outside meeting location.
- Charge on a non-flammable surface (concrete, ceramic, steel) away from any flammable material
- Use a dedicated lithium polymer battery charger and ensure that it meets the charging requirements of the battery.
- Do not leave unattended when charging
- Store LiPo batteries at room temperature between 5ºC and 27ºC (40ºF and 80ºF) for best results. The lower the temperature the better.
- ALWAYS evacuate the building to your unit's designated outside meeting location.