3.7V Lithium Polymer Battery Data Sheet

Model: 402767

Please Find More:

https://www.fpbattery.com/3-7v-650mah-lithium-polymer-battery/

File Number: A/FP2767-22251

File Version: 01

CONTACT

CUSTOMER SERVICE
86.755.3682.7358
sales@fpbattery.com
Hours of Operation:
9:00am-6:00pm CST, Monday to Friday

LEARN MORE ON:
https://www.fpbattery.com/

DNK POWER COMPANY LIMITED

BATTERY SPECIFICATION

Part Number	DNK 402767
Nominal Voltage	3.7 V
Nominal Capacity	725 mAh
Internal Impedence	<60mΩ
Charge Voltage	4.2V
Recommended Charge Current	0.2 C
Allowed Max Charge Current	0.5 C
Output Voltage Range	4.2 - 2.5 V
Recommended Discharge Current	0.2 C
Max Continuous Discharge Current	1 C
Pulse Discharge Current	3 C (10 mS)
Discharge Cut-off Voltage	2.5± 0.05V
Cycle Life to 80% Health	500 (0.2C, 25°C)

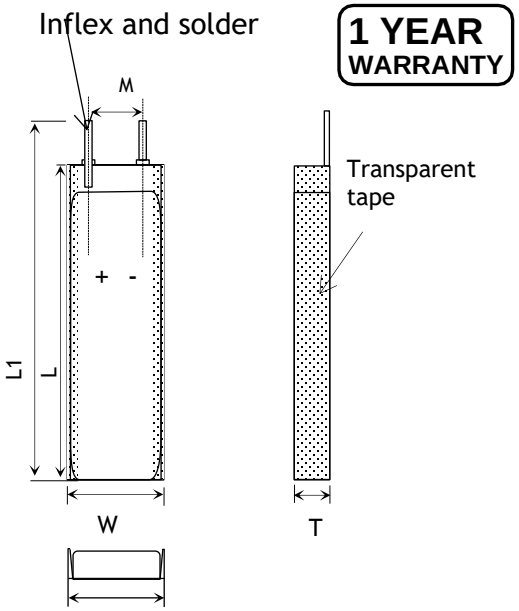

Item	Parameter (mm)
T	4
W	27
M	10
L	67
L_1	69
BL	69 ± 1
CL	100

ENVIRONMENTAL SPECIFICATIONS

Charging Temperature Range	0 - 45°C
Discharging Temperature Range	-20 - 60°C
Storage Period 1 Week	-20 - 45°C
Storage Period 1 Month	-10 - 45°C
Storage Period 6 Months	0 - 35°C

BATTERY PROTECTION

Over Charge	4.275 ± 50mV
Over Discharge	2.5V ± 50mV
Over Current	3A to 5A
Short Circuit	Yes

MECHANICAL SPECIFICATIONS

Dimensions	69x 27 x 4 mm(L*W*T)
Weight	12 g
Battery Terminals	WC/ FL *

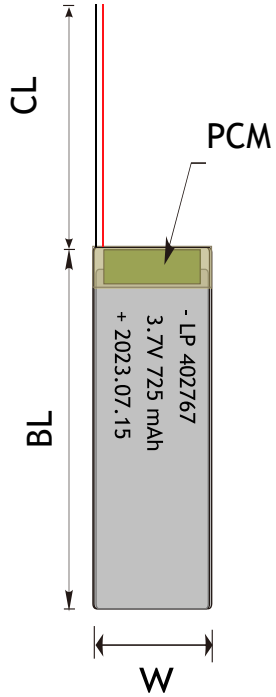

CERTIFICATION

Certification Approval	PLEASE CONSULT SALES

* WC=With Connector FL=Flying Leads UWP=Blue Wrapped PVC BWP=Black Wrapped PVC BC= Bare Cell

BULK PRODUCTION ACTUAL PICTURES



BARE CELL (BC)



FLYING LEADS (FL)



WITH CONNECTOR (WC)



BLUE WRAPPED PVC (UWP)



BLACK WRAPPED PVC (BWP)

3.7V LIPO BATTERY OPTIONS



Special Ingredients to make batteries work from -40 -85 ° C



Discharging Current up to 100C



Popular JST,Molex,Hirose,Anderson available



LED Power Indicator



Power Button



Upgrade to LifePo4 tech and life circle up to 1500

RELATIVE CURVES

Charge & Discharge Characteriestics in different Rate@25℃

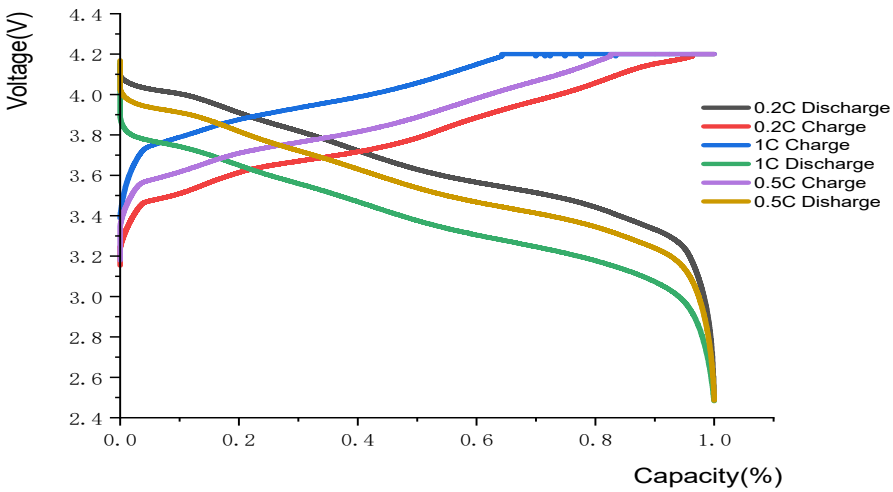

Discharge Characteriestics Curve in Different Rate@25℃

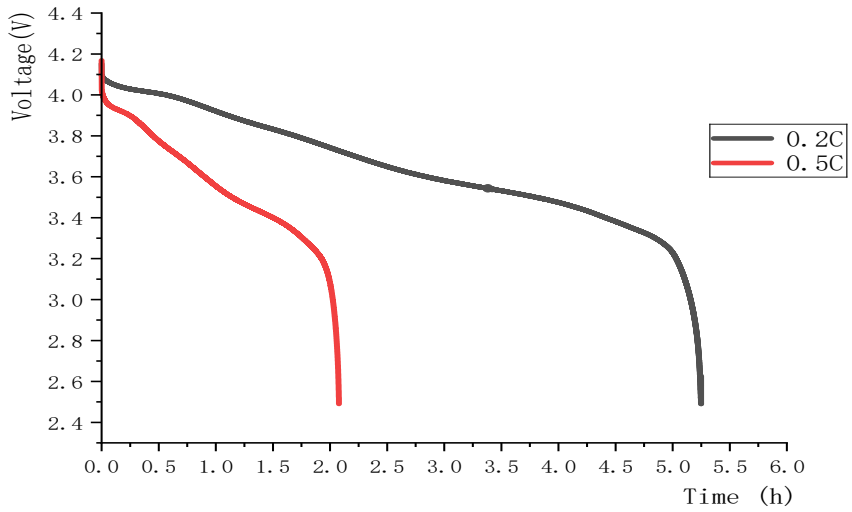

ANNOUNCEMENT

- Never charge the battery at a current exceeding 2C (2 x the capacity of the battery). A higher charge rate may cause fire.
- Never charge a battery that shows signs of puffing.
- Do not discharge a LiPo battery at a rate exceeding the maximum continuous discharge current specified for it. Otherwise, the battery will overheat and result in battery deterioration, bursting, ballooning, or possibly cause a fire or explosion.
- In the event of a crash, remove battery(s) and place it/them in a safe open area away from any combustible materials for approximately 30 minutes. On no account should you place it in a vehicle for at least 30 minutes as a delayed chemical re-action can occur causing a fire.
- Do not place batteries in closed containers.
- Do not over-discharge (3.2V per cell)
- DO NOT make or build your own charging circuit.
- ALWAYS provide information to the fire department on their arrival: room number or location of the fire and that Li-Ion or LiPo batteries are involved.
- Do not vibrate the battery excessively.
- Only ever use a charger specifically designed to charge Lithium Polymer cells. Failure to do so may a cause fire, which may result in personal injury and/or property damage.
- If taking lithium batteries on an aircraft, follow FAA and IATA rules.