3.7V Lithium Polymer Battery Data Sheet

Model: 402560

Please Find More:

https://www.fpbattery.com/3-7v-600mah-lithium-polymer-battery/

File Number: A/FP2560-21748

File Version: 01

CONTACT

CUSTOMER SERVICE
86.755.3682.7358
sales@fpbattery.com
Hours of Operation:
9:00am-6:00pm CST, Monday to Friday

LEARN MORE ON:
https://www.fpbattery.com/

DNK POWER COMPANY LIMITED

BATTERY SPECIFICATION

Part Number	DNK 402560
Nominal Voltage	3.7 V
Nominal Capacity	600 mAh
Internal Impedence	<60mΩ
Charge Voltage	4.2V
Recommended Charge Current	0.2 C
Allowed Max Charge Current	0.5 C
Output Voltage Range	4.2 - 2.5 V
Recommended Discharge Current	0.2 C
Max Continuous Discharge Current	1 C
Pulse Discharge Current	3 C (10 mS)
Discharge Cut-off Voltage	2.5± 0.05V
Cycle Life to 80% Health	500 (0.2C, 25°C)

1

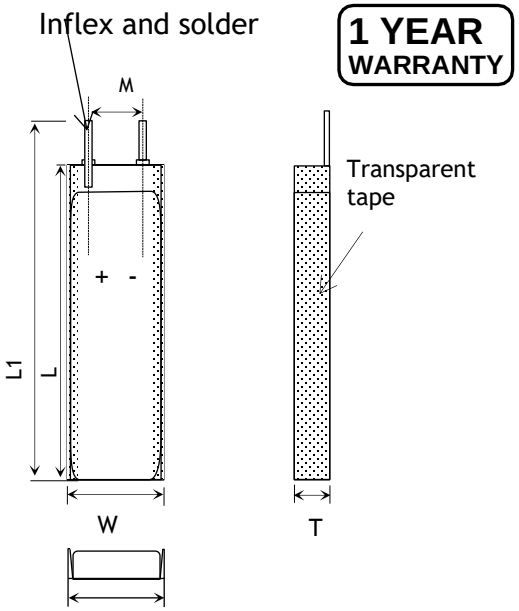

Item	Parameter (mm)
T	4
W	25
M	10
L	60
L_1	62
BL	62 ± 1
CL	100

ENVIRONMENTAL SPECIFICATIONS

Charging Temperature Range	0 - 45°C
Discharging Temperature Range	-20 - 60°C
Storage Period 1 Week	-20 - 45°C
Storage Period 1 Month	-10 - 45°C
Storage Period 6 Months	0 - 35°C

BATTERY PROTECTION

Over Charge	4.275 ± 50mV
Over Discharge	2.5V ± 50mV
Over Current	3A to 5A
Short Circuit	Yes

MECHANICAL SPECIFICATIONS

Dimensions	62x 25 x 4 mm(L*W*T)
Weight	10 g
Battery Terminals	WC/ FL *

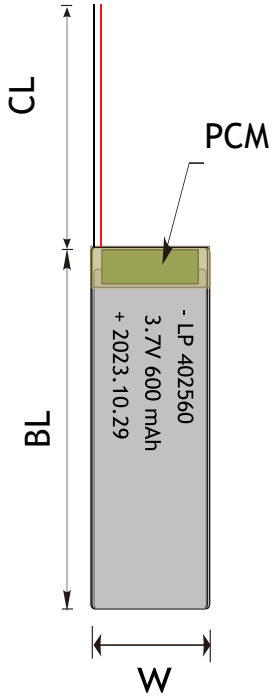

CERTIFICATION

Certification Approval	PLEASE CONSULT SALES

* WC=With Connector FL=Flying Leads UWP=Blue Wrapped PVC BWP=Black Wrapped PVC BC= Bare Cell

BULK PRODUCTION ACTUAL PICTURES



BARE CELL (BC)



FLYING LEADS (FL)



WITH CONNECTOR (WC)



BLUE WRAPPED PVC (UWP)



BLACK WRAPPED PVC (BWP)

3.7V LIPO BATTERY OPTIONS



Special Ingredients to make batteries work from -40 -85 ° C



Discharging Current up to 100C



Popular JST,Molex,Hirose,Anderson available



LED Power Indicator



Power Button



Upgrade to LifePo4 tech and life circle up to 1500

RELATIVE CURVES

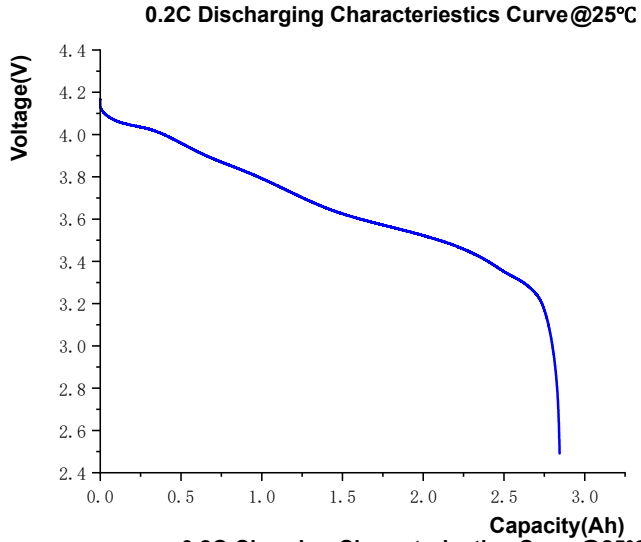

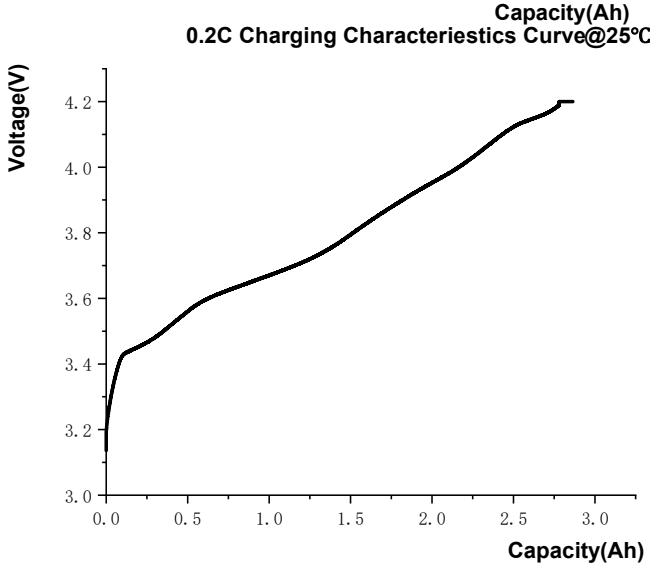

ANNOUNCEMENT

- Do not use damaged battery connectors.
- Never discharge battery to a level below 3V per cell under load.
- Do not charge the battery in a closed container.
- Do not 'peak charge' or 'top off' Lipo batteries always remove Lipo batteries from a charger once they are charged.
- Always charge/store Batteries in a non-conductive, fire-proof container or bag.
- Never drop this type of battery, it will be deformed and we advise you never to try to charge a deformed battery as this may cause swelling, leakage and even fire.
- Reacting and leaking batteries are considered hazardous waste. Please consult Emergency Procedures below.
- Only charge in an isolated area away from other flammable materials and on a non conductive and non flammable surface. Use a fireproof container. LiPo battery fires can not be extinguished. If a fire occurs, contain it by covering it with a fire blanket until it burns itself out.
- Do not place LiPo batteries in a fire.
- Take maximum care when handling and installing LiPo batteries made of flexible aluminum packaging in your model. These batteries are quickly damaged on sharp edges or spikes.
- In the event of a crash, remove battery(s) and place it/them in a safe open area away from any combustible materials for approximately 30 minutes. On no account should you place it in a vehicle for at least 30 minutes as a delayed chemical re-action can occur causing a fire.