3.7V Lithium Polymer Battery Data Sheet

Model: 402460

Please Find More:

https://www.fpbattery.com/3-7v-500mah-lithium-polymer-battery/

File Number: A/FP2460-22333

File Version: 01

CONTACT

CUSTOMER SERVICE
86.755.3682.7358
sales@fpbattery.com
Hours of Operation:
9:00am-6:00pm CST, Monday to Friday

LEARN MORE ON:
https://www.fpbattery.com/

DNK POWER COMPANY LIMITED

BATTERY SPECIFICATION

Part Number	DNK 402460
Nominal Voltage	3.7 V
Nominal Capacity	575 mAh
Internal Impedence	<60mΩ
Charge Voltage	4.2V
Recommended Charge Current	0.2 C
Allowed Max Charge Current	0.5 C
Output Voltage Range	4.2 - 2.5 V
Recommended Discharge Current	0.2 C
Max Continuous Discharge Current	1 C
Pulse Discharge Current	3 C (10 mS)
Discharge Cut-off Voltage	2.5± 0.05V
Cycle Life to 80% Health	500 (0.2C, 25°C)

1

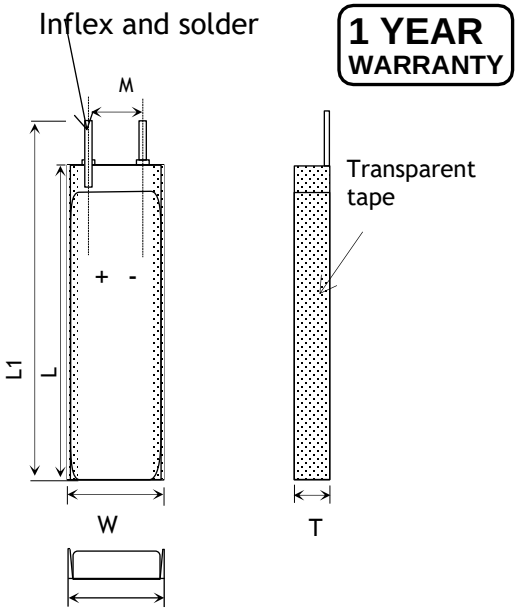

Item	Parameter (mm)
T	4
W	24
M	10
L	60
L_1	62
BL	62 ± 1
CL	100

ENVIRONMENTAL SPECIFICATIONS

Charging Temperature Range	0 - 45°C
Discharging Temperature Range	-20 - 60°C
Storage Period 1 Week	-20 - 45°C
Storage Period 1 Month	-10 - 45°C
Storage Period 6 Months	0 - 35°C

BATTERY PROTECTION

Over Charge	4.275 ± 50mV
Over Discharge	2.5V ± 50mV
Over Current	3A to 5A
Short Circuit	Yes

MECHANICAL SPECIFICATIONS

Dimensions	62x 24 x 4 mm(L*W*T)
Weight	9 g
Battery Terminals	WC/ FL *

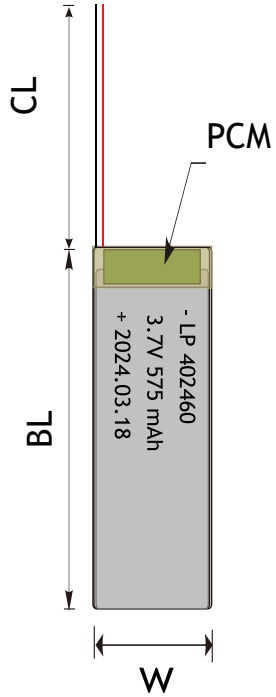

CERTIFICATION

Certification Approval	PLEASE CONSULT SALES

* WC=With Connector FL=Flying Leads UWP=Blue Wrapped PVC BWP=Black Wrapped PVC BC= Bare Cell

BULK PRODUCTION ACTUAL PICTURES



BARE CELL (BC)



FLYING LEADS (FL)



WITH CONNECTOR (WC)



BLUE WRAPPED PVC (UWP)



BLACK WRAPPED PVC (BWP)

3.7V LIPO BATTERY OPTIONS



Special Ingredients to make batteries work from -40 -85 ° C



Discharging Current up to 100C



Popular JST,Molex,Hirose,Anderson available



LED Power Indicator



Power Button



Upgrade to LifePo4 tech and life circle up to 1500

RELATIVE CURVES

Charge & Discharge Characteriestics in different Rate@25℃

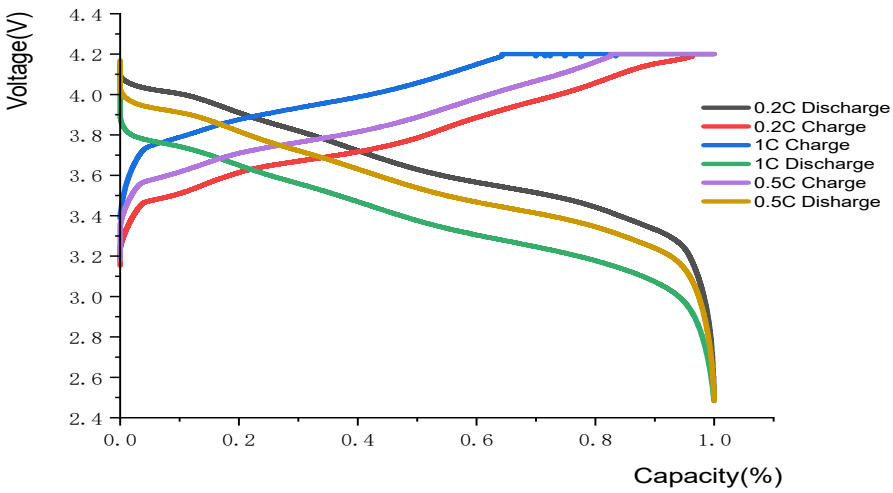

Discharge Characteriestics Curve in Different Rate@25℃

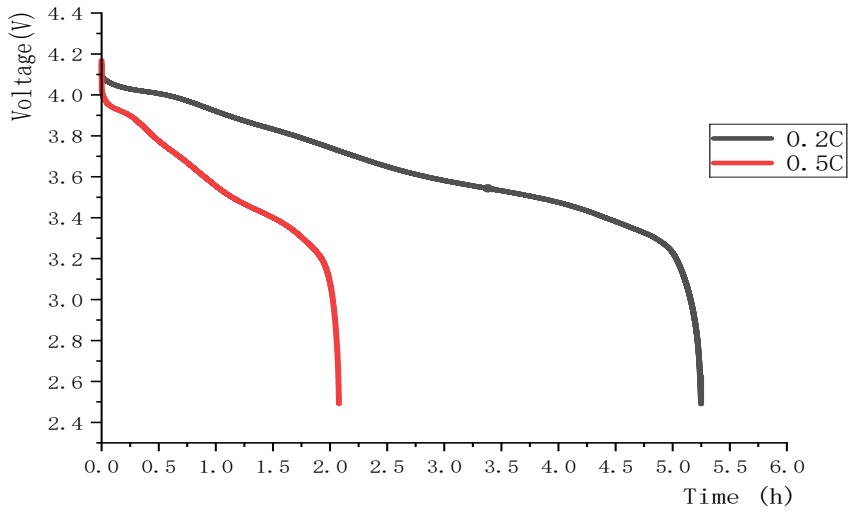

ANNOUNCEMENT

- Never charge Batteries inside of the model.
- Do not store batteries with metal.
- Observe the polarities (Negative and Positive). Do not connect them wrongly.
- Always store LiPo pack in a safe and nonGcombustible container away from flammable/combustible materials.
- Charge only with an approved LiPo charger, according to the parameters for the particular battery
- Ensure that you purchase the right type and size of battery that matches the requirements of your equipment.
- Never leave batteries unattended where they can be damaged by someone.
- When not using your LiPo/Li-ion battery pack, store it at 60-70% of the pack's rated capacity. Lithium-ion cells should never be stored fully charged, it is suggested to store them with a voltage around 3.8V. Most of the chargers have a "storage mode" that will either charge or discharge the cell to the proper storage voltage. Experts recommend to put the cells in storage mode after every run, this will help the battery to lengthen the usable life span
- Set up emergency battery isolation container.
- Never overcharge Batteries beyond the capacity listed on Batteries labels.
- Emergency Response and Disposal