3.7V Lithium Polymer Battery Data Sheet

Model: 3544110

Please Find More:

https://www.fpbattery.com/3-7v-1700mah-lithium-polymer-battery/

File Number: A/FP44110-22301

File Version: 01

CONTACT

CUSTOMER SERVICE
86.755.3682.7358
sales@fpbattery.com
Hours of Operation:
9:00am-6:00pm CST, Monday to Friday

LEARN MORE ON:
https://www.fpbattery.com/

DNK POWER COMPANY LIMITED

BATTERY SPECIFICATION

Part Number	DNK 3544110
Nominal Voltage	3.7 V
Nominal Capacity	1700 mAh
Internal Impedence	<60mΩ
Charge Voltage	4.2V
Recommended Charge Current	0.2 C
Allowed Max Charge Current	0.5 C
Output Voltage Range	4.2 - 2.5 V
Recommended Discharge Current	0.2 C
Max Continuous Discharge Current	1 C
Pulse Discharge Current	3 C (10 mS)
Discharge Cut-off Voltage	2.5± 0.05V
Cycle Life to 80% Health	500 (0.2C, 25°C)

1

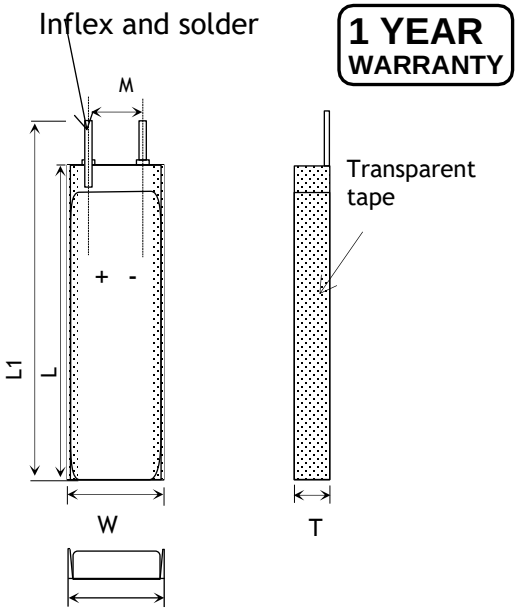

Item	Parameter (mm)
T	3
W	44
M	10
L	110
L_1	112
BL	112 ± 1
CL	100

ENVIRONMENTAL SPECIFICATIONS

Charging Temperature Range	0 - 45°C
Discharging Temperature Range	-20 - 60°C
Storage Period 1 Week	-20 - 45°C
Storage Period 1 Month	-10 - 45°C
Storage Period 6 Months	0 - 35°C

BATTERY PROTECTION

Over Charge	4.275 ± 50mV
Over Discharge	2.5V ± 50mV
Over Current	3A to 5A
Short Circuit	Yes

MECHANICAL SPECIFICATIONS

Dimensions	112x 44 x 3 mm(L*W*T)
Weight	28 g
Battery Terminals	WC/ FL *

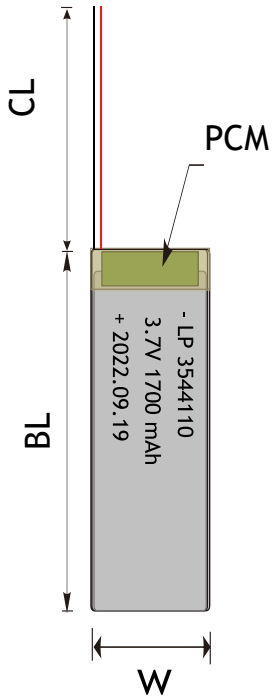

CERTIFICATION

Certification Approval	PLEASE CONSULT SALES

* WC=With Connector FL=Flying Leads UWP=Blue Wrapped PVC
BWP=Black Wrapped PVC BC= Bare Cell

BULK PRODUCTION ACTUAL PICTURES



BARE CELL (BC)



FLYING LEADS (FL)



WITH CONNECTOR (WC)



BLUE WRAPPED PVC (UWP)



BLACK WRAPPED PVC (BWP)

3.7V LIPO BATTERY OPTIONS

Special Ingredients to make batteries work from -40 -85 ° C

Discharging Current up to 100C

Popular JST,Molex,Hirose,Anderson available

LED Power Indicator

Power Button

Upgrade to LifePo4 tech and life circle up to 1500

RELATIVE CURVES

Charge & Discharge Characteriestics in different Rate@25℃

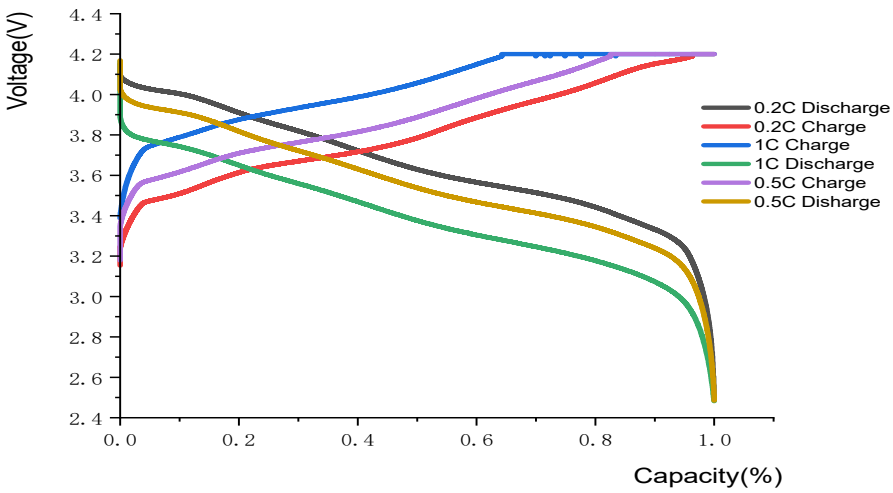

Discharge Characteriestics Curve in Different Rate@25℃

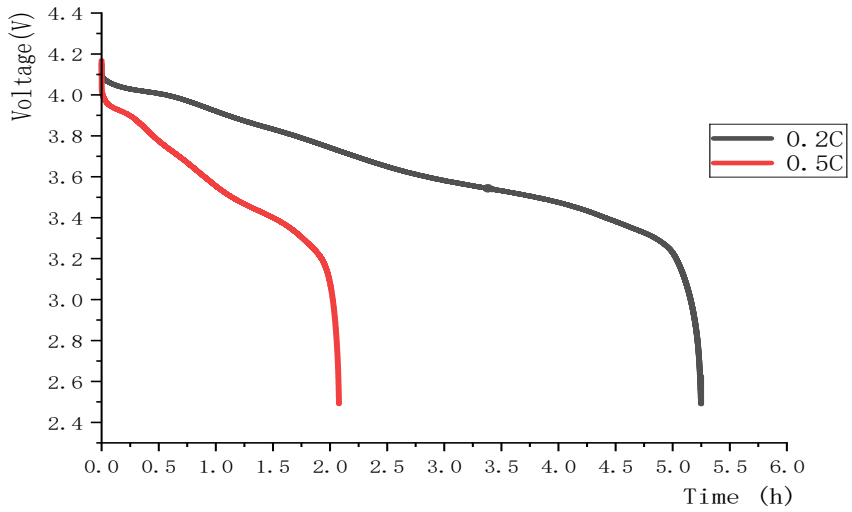

ANNOUNCEMENT

- Prevent arcing by turning the charger off before disconnecting the battery.
- Avoid placing the battery in a damp environment.
- Never leave a charging LiPo battery pack unattended. Never store batteries inside of an automobile.
- Always use a proper balance discharger when discharging your batteries
- Do not store the battery in direct sunlight.
- If you start seeing any physical changes to the battery while charging example puffing, STOP charging immediately and dispose of the battery responsibly.
- Do not inhale the smoke/fumes of a LiPo battery that is on fire. The smoke is toxic. Leave the area and call 911.
- NEVER leave your LiPo battery unattended while charging.
- Reacting and leaking batteries are considered hazardous waste. Please consult Emergency Procedures below.
- Store LiPo batteries to be disposed of in a dedicated area of the battery storage cabinet or a dedicated area of the lab away from combustible materials.
- Insure LiPo cell balancing cable is connected.