3.7V Lithium Polymer Battery Data Sheet

Model: 352764

Please Find More:

https://www.fpbattery.com/3-7v-600mah-lithium-polymer-battery/

File Number: A/FP2764-21624

File Version: 01

CONTACT

CUSTOMER SERVICE
86.755.3682.7358
sales@fpbattery.com
Hours of Operation:
9:00am-6:00pm CST, Monday to Friday

LEARN MORE ON:
https://www.fpbattery.com/

DNK POWER COMPANY LIMITED

BATTERY SPECIFICATION

Part Number	DNK 352764
Nominal Voltage	3.7 V
Nominal Capacity	605 mAh
Internal Impedence	<60mΩ
Charge Voltage	4.2V
Recommended Charge Current	0.2 C
Allowed Max Charge Current	0.5 C
Output Voltage Range	4.2 - 2.5 V
Recommended Discharge Current	0.2 C
Max Continuous Discharge Current	1 C
Pulse Discharge Current	3 C (10 mS)
Discharge Cut-off Voltage	2.5± 0.05V
Cycle Life to 80% Health	500 (0.2C, 25°C)

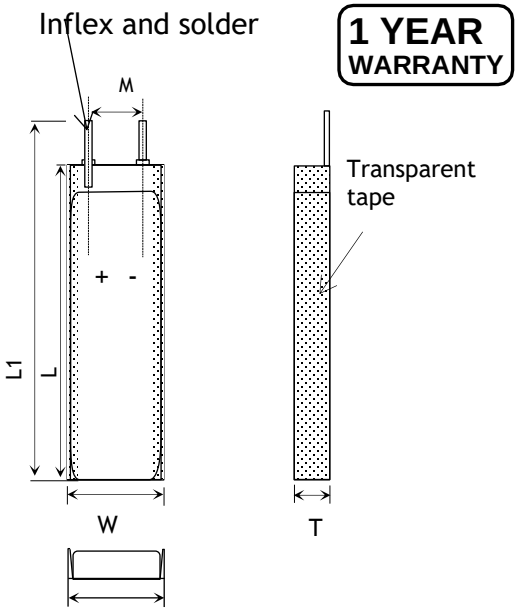

Item	Parameter (mm)
T	3
W	27
M	10
L	64
L_1	66
BL	66 ± 1
CL	100

ENVIRONMENTAL SPECIFICATIONS

Charging Temperature Range	0 - 45°C
Discharging Temperature Range	-20 - 60°C
Storage Period 1 Week	-20 - 45°C
Storage Period 1 Month	-10 - 45°C
Storage Period 6 Months	0 - 35°C

BATTERY PROTECTION

Over Charge	4.275 ± 50mV
Over Discharge	2.5V ± 50mV
Over Current	3A to 5A
Short Circuit	Yes

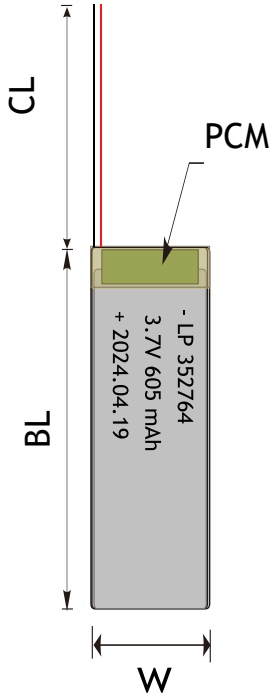

MECHANICAL SPECIFICATIONS

Dimensions	66x 27 x 3 mm(L*W*T)
Weight	10 g
Battery Terminals	WC/ FL *

CERTIFICATION

Certification Approval	PLEASE CONSULT SALES

* WC=With Connector FL=Flying Leads UWP=Blue Wrapped PVC BWP=Black Wrapped PVC BC= Bare Cell

BULK PRODUCTION ACTUAL PICTURES



BARE CELL (BC)



FLYING LEADS (FL)



WITH CONNECTOR (WC)



BLUE WRAPPED PVC (UWP)



BLACK WRAPPED PVC (BWP)

3.7V LIPO BATTERY OPTIONS



Special Ingredients to make batteries work from -40 -85 ° C



Discharging Current up to 100C



Popular JST,Molex,Hirose,Anderson available



LED Power Indicator



Power Button



Upgrade to LifePo4 tech and life circle up to 1500

RELATIVE CURVES

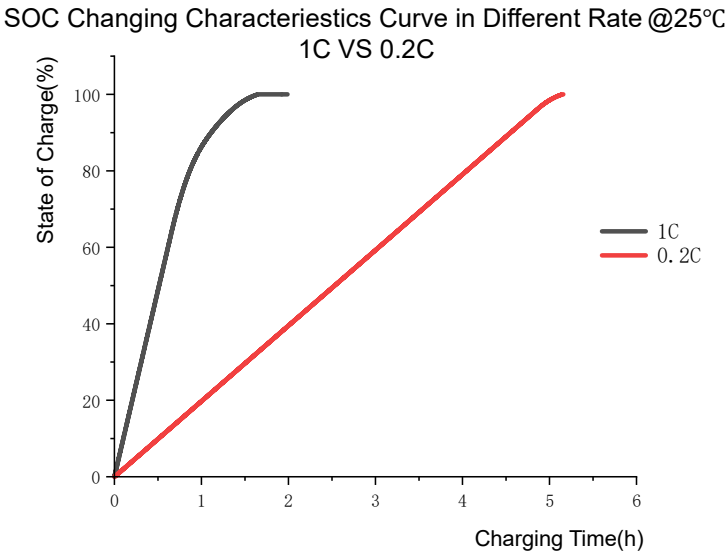

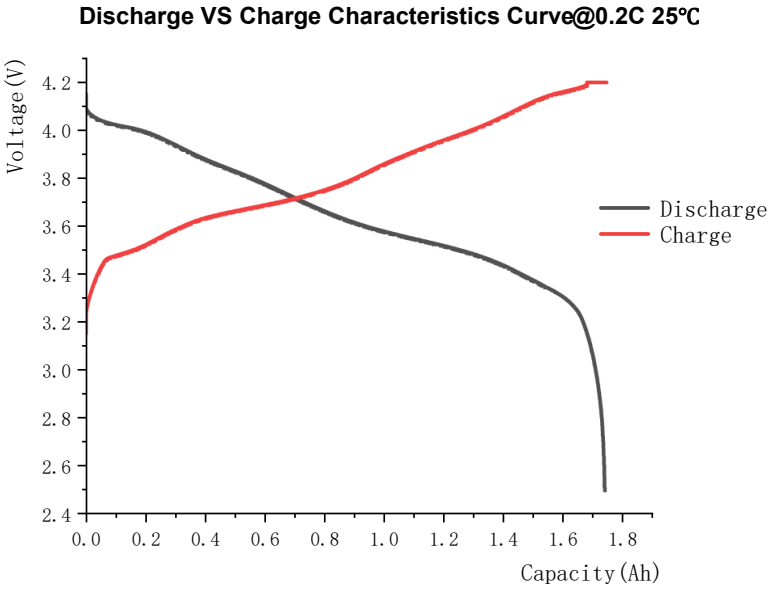

ANNOUNCEMENT

- NEVER attempt to extinguish this type of fire yourself – portable fire extinguishers have proven to be ineffective in extinguishing Li-Ion and LiPo battery fires.
- Misuse of a Lipo battery may result in the battery generating excessive heat, igniting or exploding. Keep batteries out of the reach of children.
- Never charge a LiPo battery while inside your model.
- Never charge a LiPo battery near an exit. Keep exit egress clear in case of a fire or emergency.
- Keep all batteries out of the reach of children.
- Never leave batteries unattended where they can be damaged by someone.
- The battery must be discharged at less than the maximum discharge current specified in the battery instruction manual. High discharging current may reduce the discharging capacity significantly or cause over-heat.
- Do not place the battery in a microwave or other heating device.
- Store dust free and dry and protect from moisture
- Obtain sand. Use in bottom of isolation containers and as a smothering agent in case of fire.
- Avoid prolonged use of higher power devices.