3.7V Lithium Polymer Battery Data Sheet

Model: 352460

Please Find More:

https://www.fpbattery.com/3-7v-500mah-lithium-polymer-battery/

File Number: A/FP2460-22338

File Version: 01

CONTACT

CUSTOMER SERVICE
86.755.3682.7358
sales@fpbattery.com
Hours of Operation:
9:00am-6:00pm CST, Monday to Friday

LEARN MORE ON:
https://www.fpbattery.com/

DNK POWER COMPANY LIMITED

BATTERY SPECIFICATION

Part Number	DNK 352460
Nominal Voltage	3.7 V
Nominal Capacity	505 mAh
Internal Impedence	<60mΩ
Charge Voltage	4.2V
Recommended Charge Current	0.2 C
Allowed Max Charge Current	0.5 C
Output Voltage Range	4.2 - 2.5 V
Recommended Discharge Current	0.2 C
Max Continuous Discharge Current	1 C
Pulse Discharge Current	3 C (10 mS)
Discharge Cut-off Voltage	2.5± 0.05V
Cycle Life to 80% Health	500 (0.2C, 25°C)

1

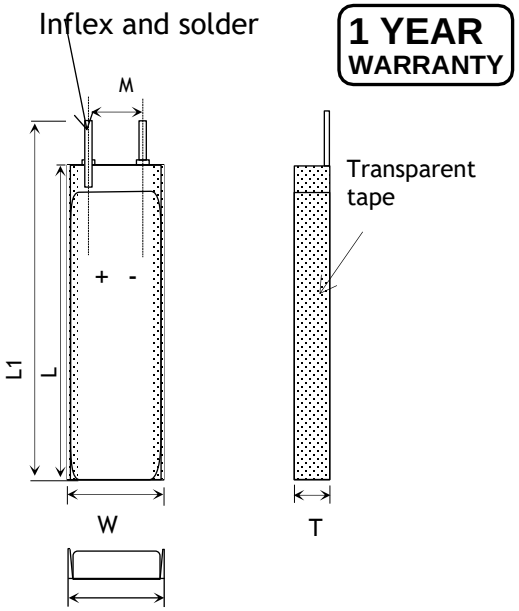

Item	Parameter (mm)
T	3
W	24
M	10
L	60
L_1	62
BL	62 ± 1
CL	100

ENVIRONMENTAL SPECIFICATIONS

Charging Temperature Range	0 - 45°C
Discharging Temperature Range	-20 - 60°C
Storage Period 1 Week	-20 - 45°C
Storage Period 1 Month	-10 - 45°C
Storage Period 6 Months	0 - 35°C

BATTERY PROTECTION

Over Charge	4.275 ± 50mV
Over Discharge	2.5V ± 50mV
Over Current	3A to 5A
Short Circuit	Yes

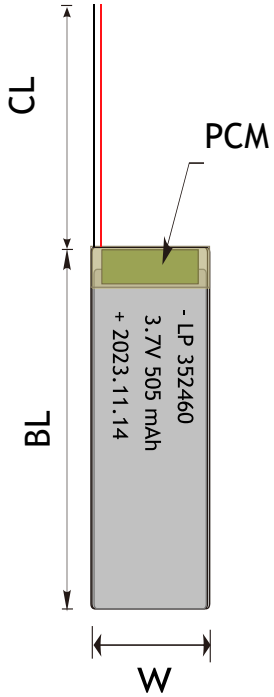

MECHANICAL SPECIFICATIONS

Dimensions	62x 24 x 3 mm(L*W*T)
Weight	8 g
Battery Terminals	WC/ FL *

CERTIFICATION

Certification Approval	PLEASE CONSULT SALES

* WC=With Connector FL=Flying Leads UWP=Blue Wrapped PVC BWP=Black Wrapped PVC BC= Bare Cell

BULK PRODUCTION ACTUAL PICTURES



BARE CELL (BC)



FLYING LEADS (FL)



WITH CONNECTOR (WC)



BLUE WRAPPED PVC (UWP)



BLACK WRAPPED PVC (BWP)

3.7V LIPO BATTERY OPTIONS



Special Ingredients to make batteries work from -40 -85 ° C



Discharging Current up to 100C



Popular JST,Molex,Hirose,Anderson available



LED Power Indicator



Power Button



Upgrade to LifePo4 tech and life circle up to 1500

RELATIVE CURVES

Charge & Discharge Characteriestics in different Rate@25℃

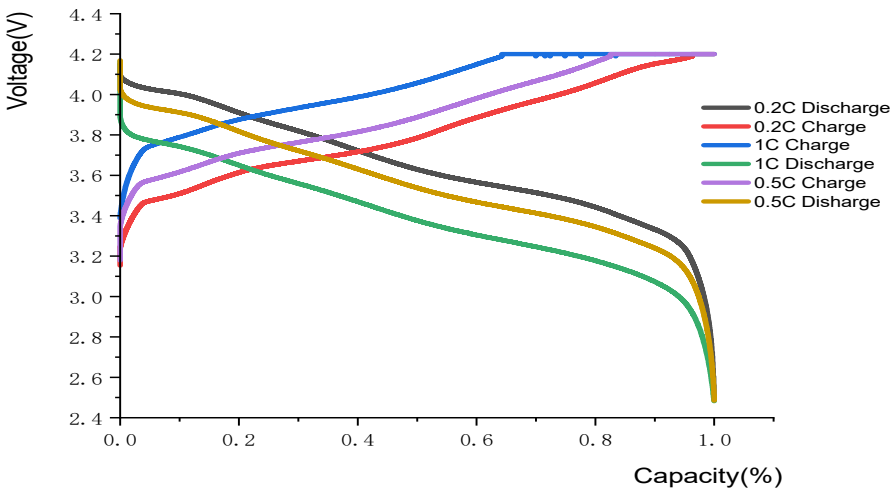

Discharge Characteriestics Curve in Different Rate@25℃

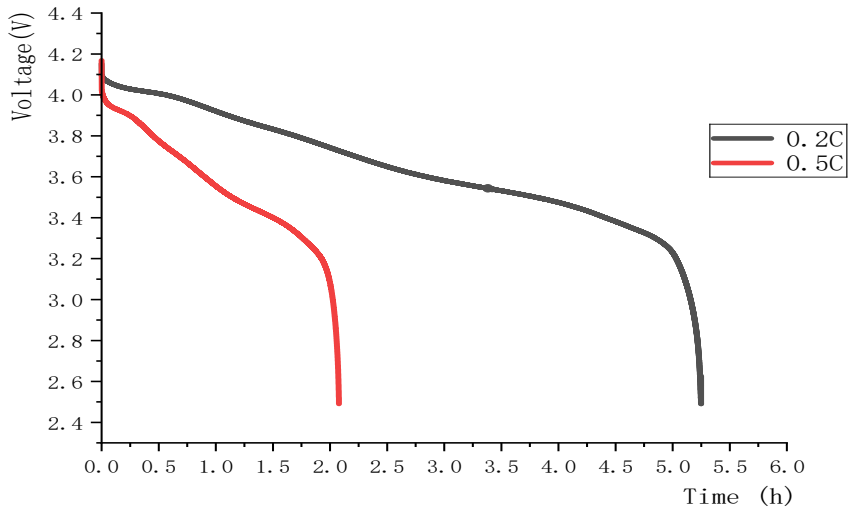

ANNOUNCEMENT

- Double check that the setting for the lithium polymer charger is correct for the pack being charged – this includes the cell count as well as the current settings.
- Do not expose the battery to high temperatures to avoid overheating.
- Insulate all battery terminals on batteries to be disposed of.
- Avoid physical damage and short circuiting.
- Regularly check the battery case for leaks or damage.
- Store batteries in a location with low humidity, free from corrosive gas & combustible materials, within the temperature range of 14˚F (-10˚C) and 104˚F (40˚C). For best results, storage between from 41˚F (5˚C) and 77˚F (25˚C) is recommended.
- Do not charge cells that have been stored in cold conditions (below 10ºC/50ºF), let them warm up (above (10ºC/50ºF), for a minimum of 60 minutes (longer is better).You risk an explosion if you attempt to use cells that have been stored at or below 0ºC (32ºF), Warm them first for at least 60 minutes (longer is better) above 10ºC (50ºF) before charging or discharging.
- Do not discharge you LiPo cells below 3.00V per cell (e.g. 9.00V for a 3S pack) as this will damage the cells and dramatically reduce the life of your cells. If you do accidentally discharge them below 3.00V per cell, leave them for 30 minutes and if the voltage recovers to over 3.30V per cell then they should be OK to use them again. If they do not recover to at least 3.00V per cell then I'm afraid you have damaged them and they should be disposed of (Please see below for the correct method of disposal).
- Only authorized personnel may ship lithium batteries. Contact EHRS if there is a need to ship batteries.
- Do not carry LiPo batteries in your pocket. They have been known to short against coins and keys and cause fires.
- Take maximum care when handling and installing LiPo batteries made of flexible aluminum packaging in your model. These batteries are quickly

damaged on sharp edges or spikes.