3.7V Lithium Polymer Battery Data Sheet

Model: 3049119

Please Find More:

https://www.fpbattery.com/3-7v-1700mah-lithium-polymer-battery/

File Number: A/FP49119-21969

File Version: 01

CONTACT

CUSTOMER SERVICE
86.755.3682.7358
sales@fpbattery.com
Hours of Operation:
9:00am-6:00pm CST, Monday to Friday

LEARN MORE ON:
https://www.fpbattery.com/

DNK POWER COMPANY LIMITED

BATTERY SPECIFICATION

Part Number	DNK 3049119
Nominal Voltage	3.7 V
Nominal Capacity	1700 mAh
Internal Impedence	<60mΩ
Charge Voltage	4.2V
Recommended Charge Current	0.2 C
Allowed Max Charge Current	0.5 C
Output Voltage Range	4.2 - 2.5 V
Recommended Discharge Current	0.2 C
Max Continuous Discharge Current	1 C
Pulse Discharge Current	3 C (10 mS)
Discharge Cut-off Voltage	2.5± 0.05V
Cycle Life to 80% Health	500 (0.2C, 25°C)

1

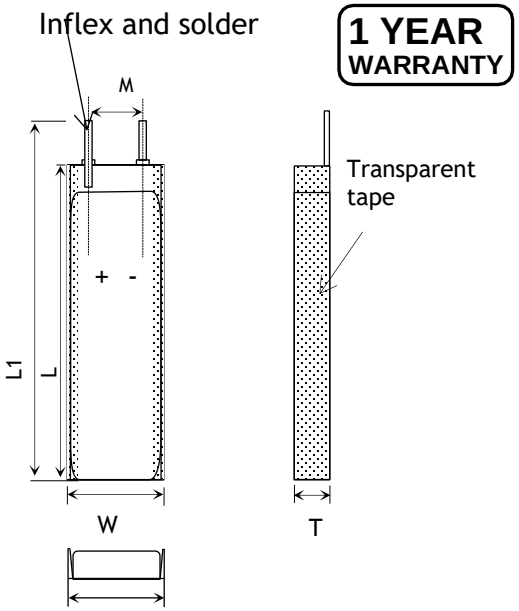

Item	Parameter (mm)
T	3
W	49
M	10
L	119
L_1	121
BL	121 ± 1
CL	100

ENVIRONMENTAL SPECIFICATIONS

Charging Temperature Range	0 - 45°C
Discharging Temperature Range	-20 - 60°C
Storage Period 1 Week	-20 - 45°C
Storage Period 1 Month	-10 - 45°C
Storage Period 6 Months	0 - 35°C

BATTERY PROTECTION

Over Charge	4.275 ± 50mV
Over Discharge	2.5V ± 50mV
Over Current	3A to 5A
Short Circuit	Yes

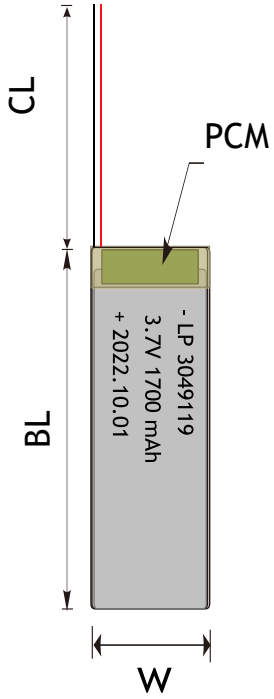

MECHANICAL SPECIFICATIONS

Dimensions	121x 49 x 3 mm(L*W*T)
Weight	28 g
Battery Terminals	WC/ FL *

CERTIFICATION

Certification Approval	PLEASE CONSULT SALES

* WC=With Connector FL=Flying Leads UWP=Blue Wrapped PVC BWP=Black Wrapped PVC BC= Bare Cell

BULK PRODUCTION ACTUAL PICTURES



BARE CELL (BC)



FLYING LEADS (FL)



WITH CONNECTOR (WC)



BLUE WRAPPED PVC (UWP)



BLACK WRAPPED PVC (BWP)

3.7V LIPO BATTERY OPTIONS

Special Ingredients to make batteries work from -40 -85 ° C

Discharging Current up to 100C

Popular JST,Molex,Hirose,Anderson available

LED Power Indicator

Power Button

Upgrade to LifePo4 tech and life circle up to 1500

RELATIVE CURVES

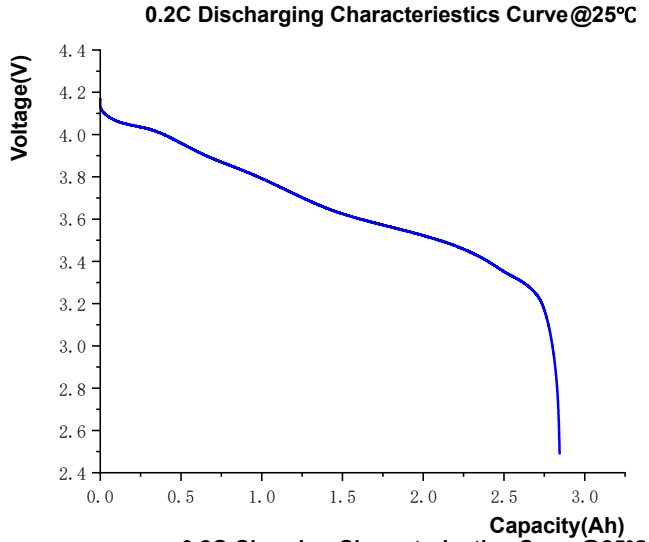

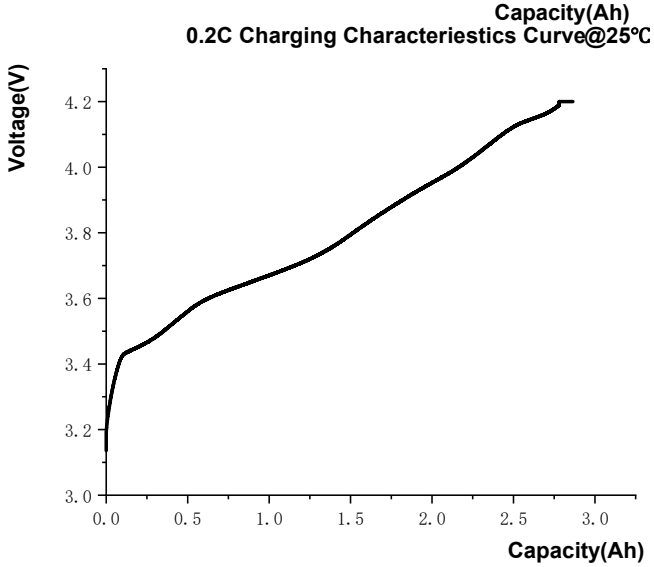

ANNOUNCEMENT

- Check and double check that you have set the correct voltage/number of cells and the maximum current does not exceed the stated charge rate (normally 1C). If using an automatic charger, check that it has detected the correct number of cells. Check it again through every stage of charging.
- Do not charge Lipo batteries inside a car. Do not charge Lipo batteries inside a RC model.
- Before starting work,ensure that a written experimental protocol including safety information is available.
- Avoid bending or twisting the battery.
- Only authorized personnel may ship lithium batteries. Contact EHRS if there is a need to ship batteries.
- Charging with higher current than recommended value may cause damage to cell electrical, mechanical and safety performance and could lead to heat generation or leakage.
- Observe the polarities (Negative and Positive). Do not connect them wrongly.
- Do not store batteries with metal.
- Never put LiPo batteries or battery packs in pockets, drawers or bags where they might make contact with something made of metal. This can cause a short circuit.
- Use the charger program to charge the LiPo batteries, never use any other program.
- Charging current should be less than maximum charge current specified in the Product Specification.