3.7V Lithium Polymer Battery Data Sheet

Model: 303074

Please Find More:

https://www.fpbattery.com/3-7v-650mah-lithium-polymer-battery/

File Number: A/FP3074-22217

File Version: 01

CONTACT

CUSTOMER SERVICE
86.755.3682.7358
sales@fpbattery.com
Hours of Operation:
9:00am-6:00pm CST, Monday to Friday

LEARN MORE ON:
https://www.fpbattery.com/

DNK POWER COMPANY LIMITED

BATTERY SPECIFICATION

Part Number	DNK 303074
Nominal Voltage	3.7 V
Nominal Capacity	665 mAh
Internal Impedence	<60mΩ
Charge Voltage	4.2V
Recommended Charge Current	0.2 C
Allowed Max Charge Current	0.5 C
Output Voltage Range	4.2 - 2.5 V
Recommended Discharge Current	0.2 C
Max Continuous Discharge Current	1 C
Pulse Discharge Current	3 C (10 mS)
Discharge Cut-off Voltage	2.5± 0.05V
Cycle Life to 80% Health	500 (0.2C, 25°C)

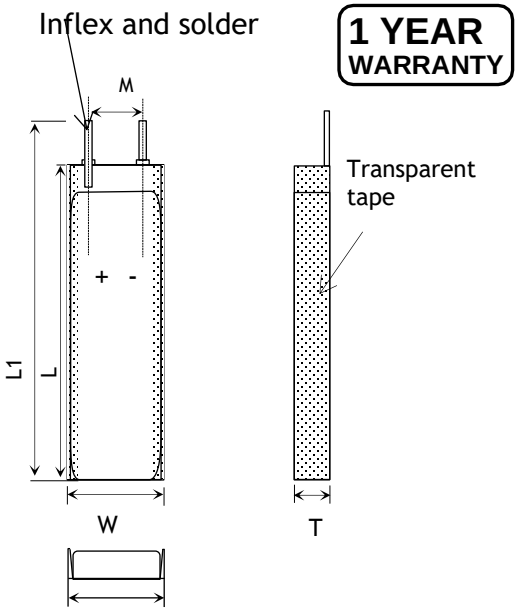

Item	Parameter (mm)
T	3
W	30
M	10
L	74
L_1	76
BL	76 ± 1
CL	100

ENVIRONMENTAL SPECIFICATIONS

Charging Temperature Range	0 - 45°C
Discharging Temperature Range	-20 - 60°C
Storage Period 1 Week	-20 - 45°C
Storage Period 1 Month	-10 - 45°C
Storage Period 6 Months	0 - 35°C

BATTERY PROTECTION

Over Charge	4.275 ± 50mV
Over Discharge	2.5V ± 50mV
Over Current	3A to 5A
Short Circuit	Yes

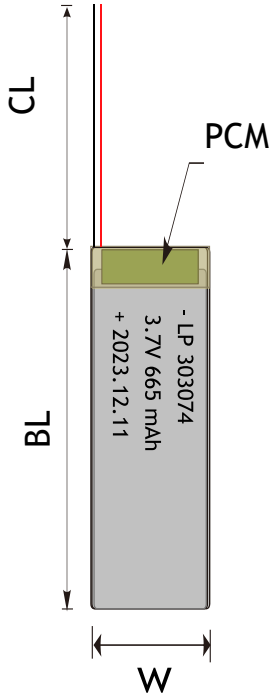

MECHANICAL SPECIFICATIONS

Dimensions	76x 30 x 3 mm(L*W*T)
Weight	11 g
Battery Terminals	WC/ FL *

CERTIFICATION

Certification Approval	PLEASE CONSULT SALES

* WC=With Connector FL=Flying Leads UWP=Blue Wrapped PVC BWP=Black Wrapped PVC BC= Bare Cell

BULK PRODUCTION ACTUAL PICTURES



BARE CELL (BC)



FLYING LEADS (FL)



WITH CONNECTOR (WC)



BLUE WRAPPED PVC (UWP)



BLACK WRAPPED PVC (BWP)

3.7V LIPO BATTERY OPTIONS



Special Ingredients to make batteries work from -40 -85 ° C



Discharging Current up to 100C



Popular JST,Molex,Hirose,Anderson available



LED Power Indicator



Power Button



Upgrade to LifePo4 tech and life circle up to 1500

RELATIVE CURVES

Charge & Discharge Characteriestics in different Rate@25℃

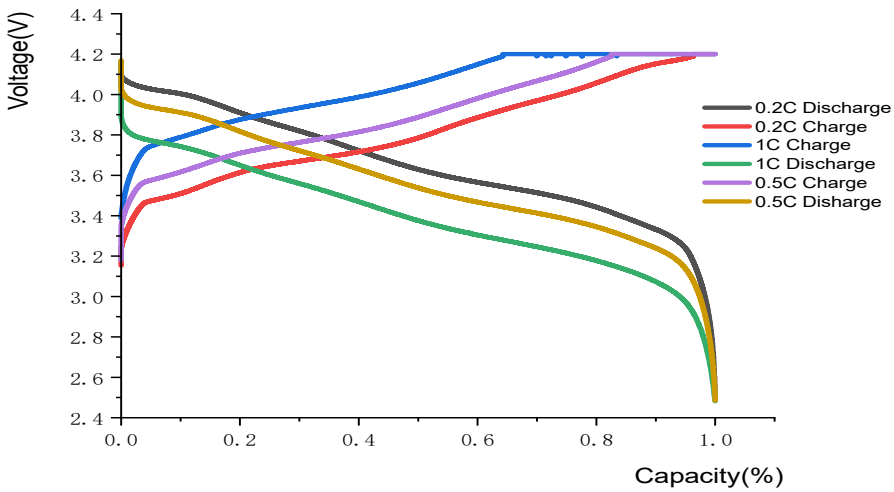

Discharge Characteriestics Curve in Different Rate@25℃

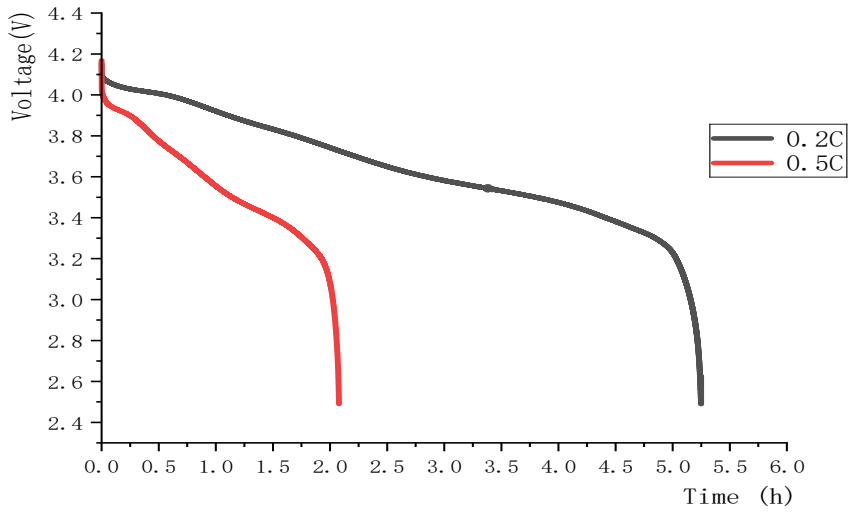

ANNOUNCEMENT

- Remove Li-Ion powered devices and batteries from the charger once they are fully charged.
- A LiPo Sack or metal/ceramic storage container is safest. Always store your LiPo's partially charged so they maintain their performance levels overtime; there is no need to cycle them unless When storing batteries for extended periods, store at a half charged state. stored for periods longer than 36 months.
- Place batteries suspected of being damaged into the emergency battery isolation container and monitor temperature.
- Never charge a battery that shows signs of puffing.
- If taking lithium batteries on an aircraft, follow FAA and IATA rules.
- ALWAYS evacuate the building to your unit's designated outside meeting location.
- DO NOT make or build your own charging circuit.
- Do not charge LiPo batteries in a vehicle or in the engine compartment of a vehicle.
- Use lithium battery safety bags/containers during charging.
- Obtain container to safely transport LiPo batteries between the labs and use locations. Remove from vehicle once at the destination.
- Short circuits may cause fire and injury! If you plan to cut the battery's terminal wires, you must cut each wire individually, making sure the wires not to touch each other. Otherwise, a short circuit may occur and potentially cause a fire. If you accidentally cause the battery to short circuit, place it in a safe space and observe it for at least 15 minutes. The battery may swell or possibly catch fire during this time. Additionally, the powerful electric current may cause severe injuries if the battery leads come in contact with rings or jewelry. Dispose of used or damaged LiPo batteries at your local Hazardous Waste Facility or Recycling Center.