3.7V Lithium Polymer Battery Data Sheet

Model: 553539

Please Find More:

https://www.fpbattery.com/3-7v-750mah-lithium-polymer-battery/

File Number: A/FP3539-4476

File Version: 01

CONTACT

CUSTOMER SERVICE
86.755.3682.7358
sales@fpbattery.com
Hours of Operation:
9:00am-6:00pm CST, Monday to Friday

LEARN MORE ON:
https://www.fpbattery.com/

DNK POWER COMPANY LIMITED

BATTERY SPECIFICATION

Part Number	DNK 553539
Nominal Voltage	3.7 V
Nominal Capacity	750 mAh
Internal Impedence	<60mΩ
Charge Voltage	4.2V
Recommended Charge Current	0.2 C
Allowed Max Charge Current	0.5 C
Output Voltage Range	4.2 - 2.5 V
Recommended Discharge Current	0.2 C
Max Continuous Discharge Current	1 C
Pulse Discharge Current	3 C (10 mS)
Discharge Cut-off Voltage	2.5± 0.05V
Cycle Life to 80% Health	500 (0.2C, 25°C)

1

1 YEAR WARRANTY

Inflex and soler

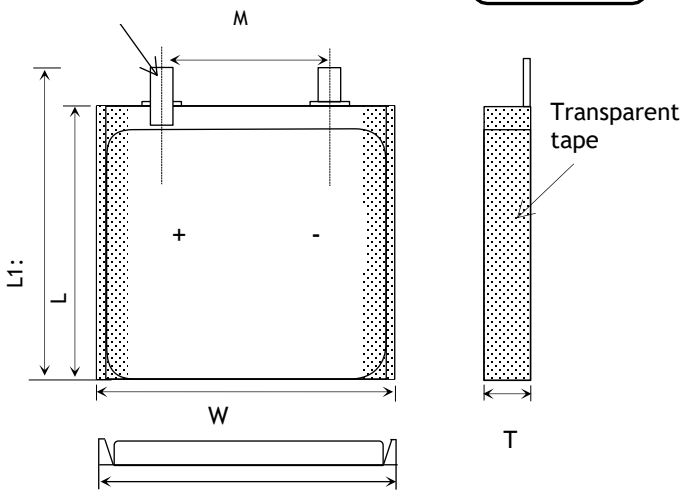

Item	Parameter (mm)
T	5
W	35
M	10
L	39
L_1	41
BL	41 ± 1
CL	100

ENVIRONMENTAL SPECIFICATIONS

Charging Temperature Range	0 - 45°C
Discharging Temperature Range	-20 - 60°C
Storage Period 1 Week	-20 - 45°C
Storage Period 1 Month	-10 - 45°C
Storage Period 6 Months	0 - 35°C

BATTERY PROTECTION

Over Charge	4.275 ± 50mV
Over Discharge	2.5V ± 50mV
Over Current	3A to 5A
Short Circuit	Yes

MECHANICAL SPECIFICATIONS

Dimensions	41x 35 x 5 mm(L*W*T)
Weight	Around 12 g
Battery Terminals	WC/ FL *

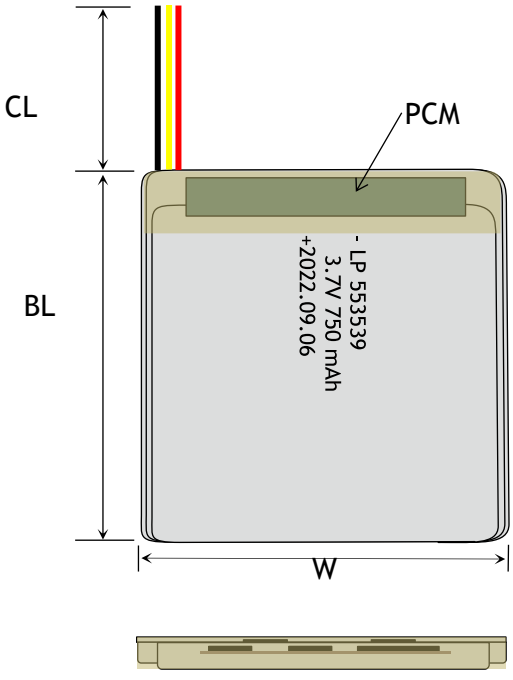

CERTIFICATION

Certification Approval	PLEASE CONSULT SALES

* aWC=With Connector FL=Flying Leads UWP=Blue Wrapped PVC
BWP=Black Wrapped PVC BC= Bare Cell

BULK PRODUCTION ACTUAL PICTURES



BARE CELL (BC)



FLYING LEADS (FL)



WITH CONNECTOR (WC)



BLUE WRAPPED PVC (UWP)



BLACK WRAPPED PVC (BWP)

3.7V LIPO BATTERY OPTIONS



Special Ingredients to make batteries work from -40 -85 ° C



Discharging Current up to 100C



Popular JST,Molex,Hirose,Anderson available



LED Power Indicator



Power Button



Upgrade to LifePo4 tech and life circle up to 1500

RELATIVE CURVES

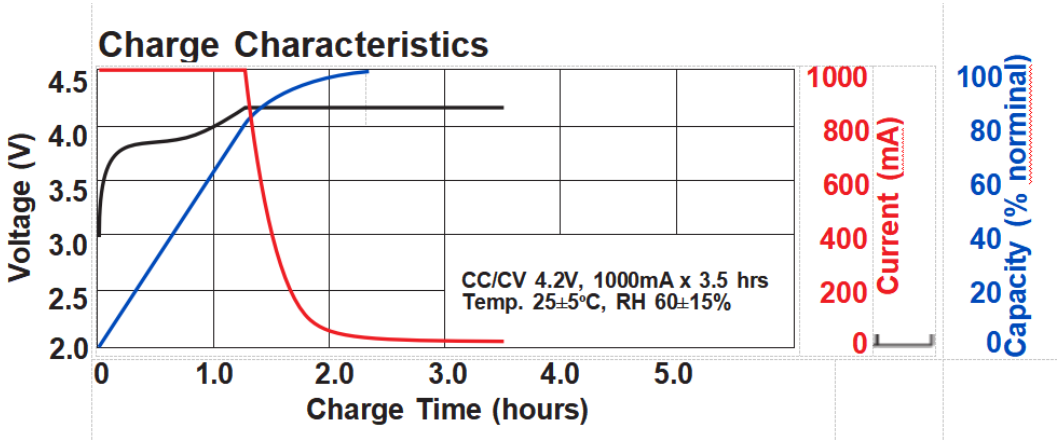

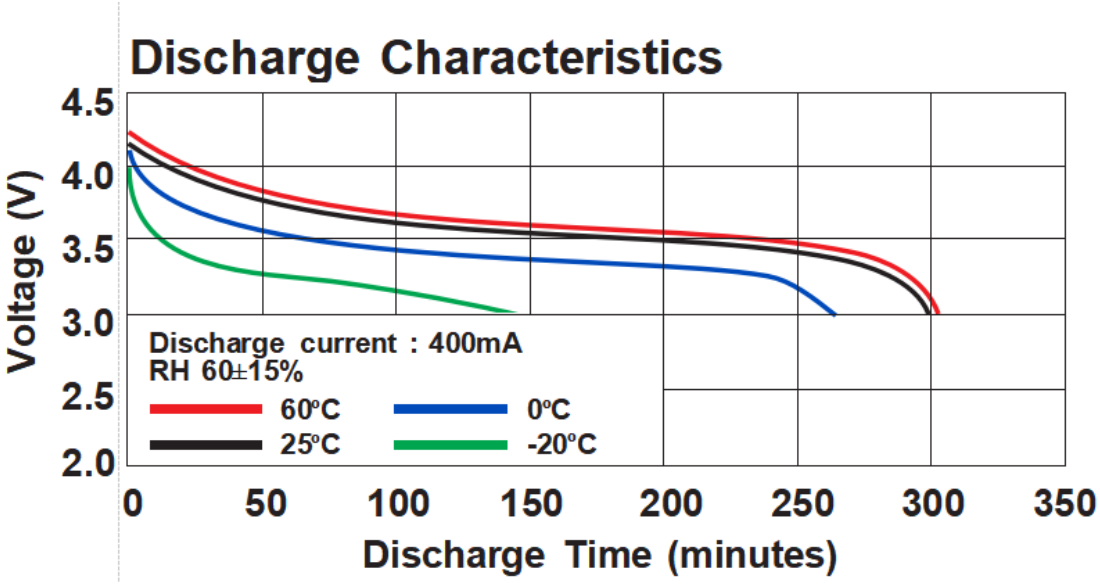

ANNOUNCEMENT

- Do not store or use the battery with objects that could cause a short circuit such as coins, metal objects etc.
- Do not open the battery system or modules unless you have a risk assessment, training and permission.
- NEVER leave E-bikes or other similar personal mobility devices unattended while charging.
- Emergency Response and Disposal
- Inspect batteries weekly. Look for puffed LiPo battery casing. Monitor temperature.
- If you start seeing any physical changes to the battery while charging example puffing, STOP charging immediately and dispose of the battery responsibly.
- Before starting work, inspect your battery for signs of damage prior to each use: bulging, hissing, leaking, or smoking. Do not use your battery if it displays any of these characteristics.
- ALWAYS provide information to the fire department on their arrival: room number or location of the fire and that Li-Ion or LiPo batteries are involved.
- Charging current should be less than maximum charge current specified in the Product Specification.
- Avoid changing the battery frequently during use.
- Check the voltage of the pack or cells before charging. Do not attempt to charge any pack if the open voltage is lower than the Lowest Open Voltage. Check the voltage of each cell before charging via the balance connector. If the voltage of any cell is less than 3.0V/cell, remove it from service, and dispose of it properly.