3.7V Lithium Polymer Battery Data Sheet

Model: 553150

Please Find More:

https://www.fpbattery.com/3-7v-800mah-lithium-polymer-battery/

File Number: A/FP3150-14217

File Version: 01

CONTACT

CUSTOMER SERVICE
86.755.3682.7358
sales@fpbattery.com
Hours of Operation:
9:00am-6:00pm CST, Monday to Friday

LEARN MORE ON:
https://www.fpbattery.com/

DNK POWER COMPANY LIMITED

BATTERY SPECIFICATION

Part Number	DNK 553150
Nominal Voltage	3.7 V
Nominal Capacity	850 mAh
Internal Impedence	<60mΩ
Charge Voltage	4.2V
Recommended Charge Current	0.2 C
Allowed Max Charge Current	0.5 C
Output Voltage Range	4.2 - 2.5 V
Recommended Discharge Current	0.2 C
Max Continuous Discharge Current	1 C
Pulse Discharge Current	3 C (10 mS)
Discharge Cut-off Voltage	2.5± 0.05V
Cycle Life to 80% Health	500 (0.2C, 25°C)

1

1 YEAR WARRANTY

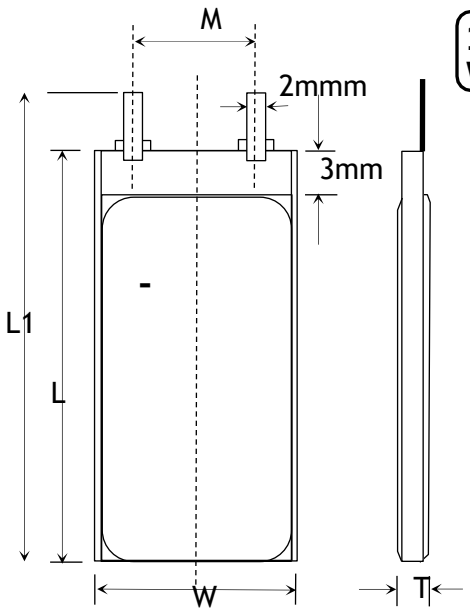

Item	Parameter (mm)
T	5
W	31
M	10
L	50
L_1	52
BL	52 ± 1
CL	100

ENVIRONMENTAL SPECIFICATIONS

Charging Temperature Range	0 - 45°C
Discharging Temperature Range	-20 - 60°C
Storage Period 1 Week	-20 - 45°C
Storage Period 1 Month	-10 - 45°C
Storage Period 6 Months	0 - 35°C

BATTERY PROTECTION

Over Charge	4.275 ± 50mV
Over Discharge	2.5V ± 50mV
Over Current	3A to 5A
Short Circuit	Yes

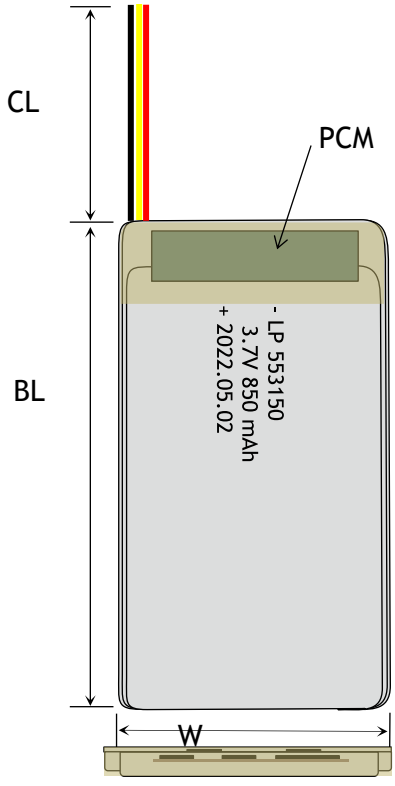

MECHANICAL SPECIFICATIONS

Dimensions	52x 31 x 5 mm(L*W*T)
Weight	Around 14 g
Battery Terminals	WC/ FL *

CERTIFICATION

Certification Approval	PLEASE CONSULT SALES

* WC=With Connector FL=Flying Leads UWP=Blue Wrapped PVC BWP=Black Wrapped PVC BC= Bare Cell

RELATIVE CURVES

0.2C Discharge Characteristics Curve

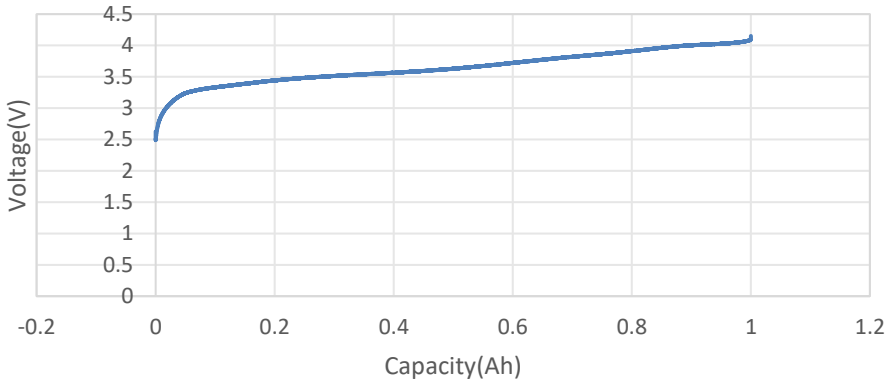

1C Discharge Characteristics Curves

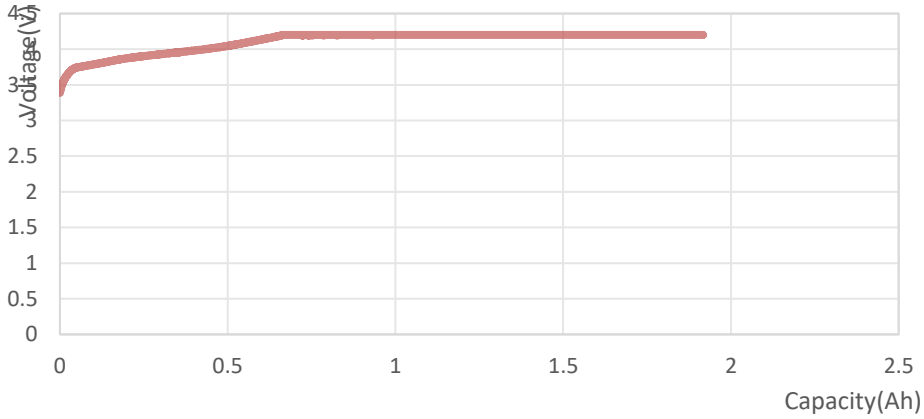

ANNOUNCEMENT

- Never put batteries in your pocket or non fireproof bags this may cause the battery to short circuit.
- If you have dropped or damageda LiPo battery in anyway, do not attempt to charge it.
- Do not use water to extinguish a buttery fire Use a Class ABC dry fire extinguisher.
- The battery must be installed in the model on a flat surface.
- Emergency Response and Disposal
- Storing LiPo batteries at temperatures higher than 170˚F (76˚C) for more than 2 hours may result in battery damage or possibly fire.
- Store LiPo batteries at correct voltage (around 3.8 volts).
- If charging indoors, only charge with a smoke detector above where you are charging.
- Ensure that you choose a regular and reputable supplier before purchasing.
- Ensure that all cells in a battery maintain the same voltage across all cells at all times.
- Avoid placing the battery near sources of ignition.