3.7V Lithium Polymer Battery Data Sheet

Model: 552840

Please Find More:

https://www.fpbattery.com/3-7v-600mah-lithium-polymer-battery/

File Number: A/FP2840-10879

File Version: 01

CONTACT

CUSTOMER SERVICE
86.755.3682.7358
sales@fpbattery.com
Hours of Operation:
9:00am-6:00pm CST, Monday to Friday

LEARN MORE ON:
https://www.fpbattery.com/

DNK POWER COMPANY LIMITED

BATTERY SPECIFICATION

Part Number	DNK 552840
Nominal Voltage	3.7 V
Nominal Capacity	615 mAh
Internal Impedence	<60mΩ
Charge Voltage	4.2V
Recommended Charge Current	0.2 C
Allowed Max Charge Current	0.5 C
Output Voltage Range	4.2 - 2.5 V
Recommended Discharge Current	0.2 C
Max Continuous Discharge Current	1 C
Pulse Discharge Current	3 C (10 mS)
Discharge Cut-off Voltage	2.5± 0.05V
Cycle Life to 80% Health	500 (0.2C, 25°C)

1

ENVIRONMENTAL SPECIFICATIONS

Charging Temperature Range	0 - 45°C
Discharging Temperature Range	-20 - 60°C
Storage Period 1 Week	-20 - 45°C
Storage Period 1 Month	-10 - 45°C
Storage Period 6 Months	0 - 35°C

BATTERY PROTECTION

Over Charge	4.275 ± 50mV
Over Discharge	2.5V ± 50mV
Over Current	3A to 5A
Short Circuit	Yes

MECHANICAL SPECIFICATIONS

Dimensions	42x 28 x 5 mm(L*W*T)
Weight	Around 10 g
Battery Terminals	WC/ FL *

CERTIFICATION

Certification Approval	PLEASE CONSULT SALES

* WC=With Connector FL=Flying Leads UWP=Blue Wrapped PVC BWP=Black Wrapped PVC BC= Bare Cell

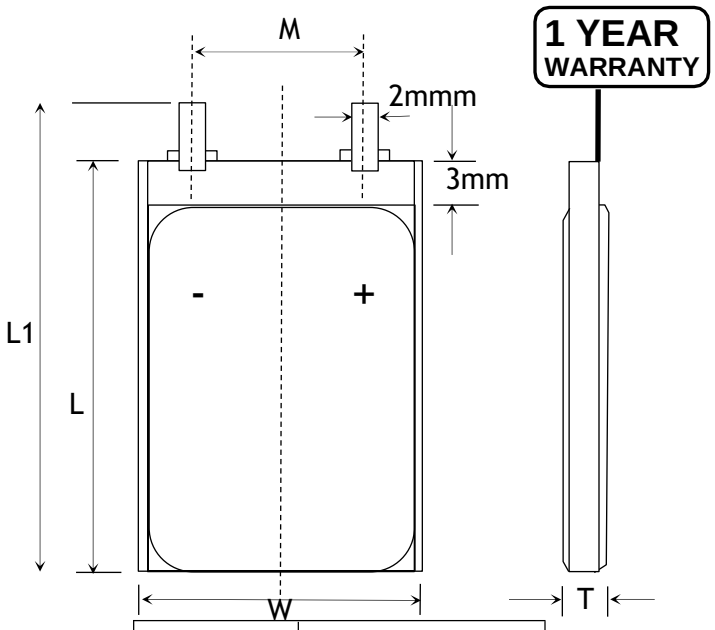

Item	Parameter (mm)
T	5
W	28
M	10
L	40
L_1	42
BL	42 ± 1
CL	100

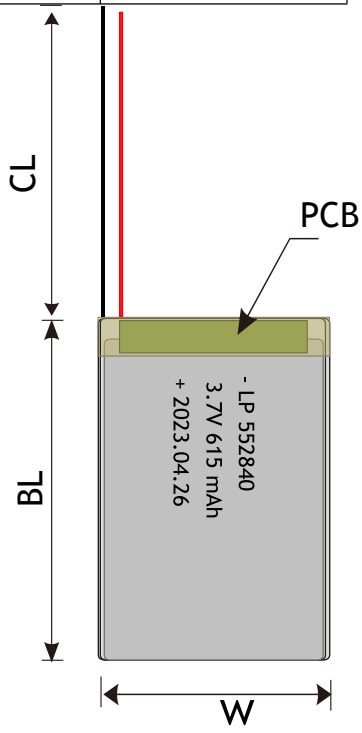

BULK PRODUCTION ACTUAL PICTURES



BARE CELL (BC)



FLYING LEADS (FL)



WITH CONNECTOR (WC)



BLUE WRAPPED PVC (UWP)



BLACK WRAPPED PVC (BWP)

3.7V LIPO BATTERY OPTIONS

Special Ingredients to make batteries work from -40 -85 ° C

Discharging Current up to 100C

Popular JST,Molex,Hirose,Anderson available





LED Power Indicator



Power Button

RELATIVE CURVES

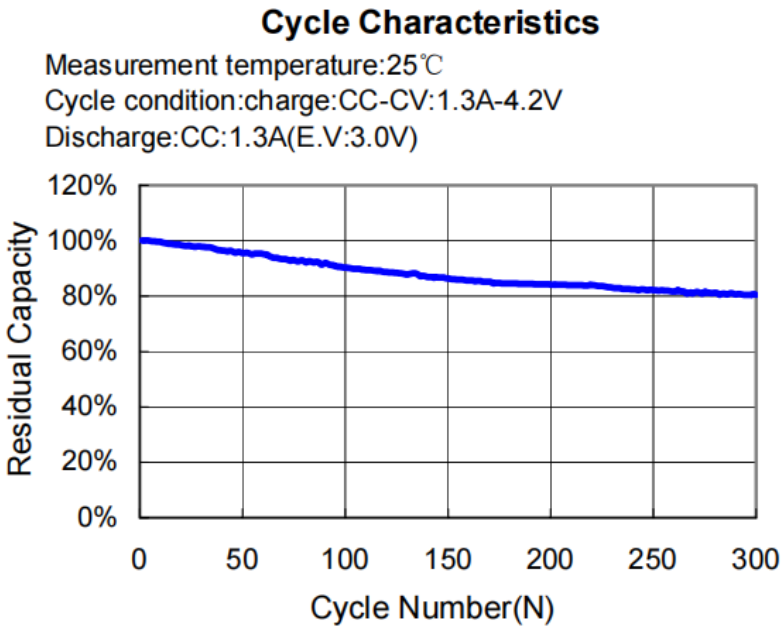

ANNOUNCEMENT

- In premises that also provide sleeping accommodation, serious consideration should be given, wherever practicable, to using timers to control socket outlets used for charging equipment
- Never put batteries in your pocket or non fireproof bags this may cause the battery to short circuit.
- DO NOT make or build your own charging circuit.
- Always follow the manufacturer's safety instructions
- Double check that the setting for the lithium polymer charger is correct for the pack being charged – this includes the cell count as well as the current settings.
- Do not store the battery in direct sunlight.
- Always inspect batteries for any signs of damage before use, check for physical damage such as cracks/bulges/indentations . Any battery that has been damaged, dented or pierced should be taken out of service immediately, segregated from other batteries and stored as set out below while awaiting safe disposal. Similarly, damaged goods containing batteries should also be segregated from other material and stored safely to await safe disposal.
- Do not open the battery system or modules unless you have a risk assessment, training and permission.
- Obtain recycling container from EHRS for all batteries except LiPo.
- Do not allow children to touch the battery, especially untrained children.
- Never charge a LiPo battery while it is inside your model or other electronic device. If it catches fire, it can lead to total destruction of the item inside which it is being charged.