3.7V Lithium Polymer Battery Data Sheet

Model: 552649

Please Find More:

https://www.fpbattery.com/3-7v-650mah-lithium-polymer-battery/

File Number: A/FP2649-17959

File Version: 01

CONTACT

CUSTOMER SERVICE
86.755.3682.7358
sales@fpbattery.com
Hours of Operation:
9:00am-6:00pm CST, Monday to Friday

LEARN MORE ON:
https://www.fpbattery.com/

DNK POWER COMPANY LIMITED

BATTERY SPECIFICATION

Part Number	DNK 552649
Nominal Voltage	3.7 V
Nominal Capacity	700 mAh
Internal Impedence	<60mΩ
Charge Voltage	4.2V
Recommended Charge Current	0.2 C
Allowed Max Charge Current	0.5 C
Output Voltage Range	4.2 - 2.5 V
Recommended Discharge Current	0.2 C
Max Continuous Discharge Current	1 C
Pulse Discharge Current	3 C (10 mS)
Discharge Cut-off Voltage	2.5± 0.05V
Cycle Life to 80% Health	500 (0.2C, 25°C)

1

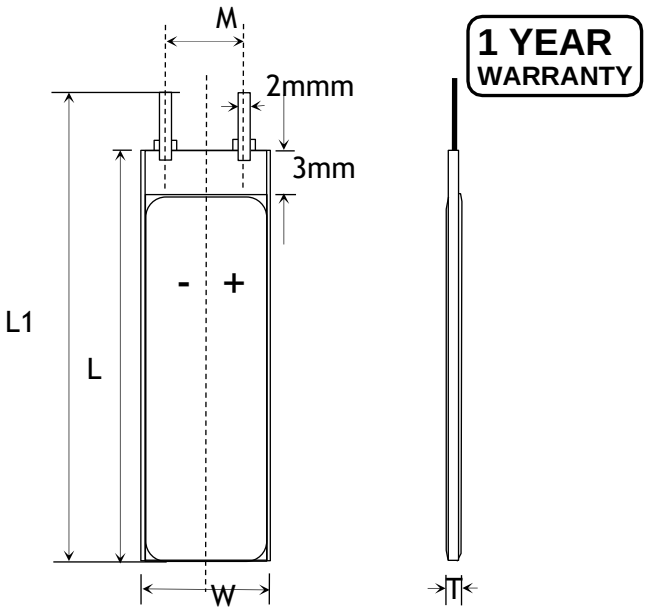

Item	Parameter (mm)
T	5
W	26
M	10
L	49
L_1	51
BL	51 ± 1
CL	100

ENVIRONMENTAL SPECIFICATIONS

Charging Temperature Range	0 - 45°C
Discharging Temperature Range	-20 - 60°C
Storage Period 1 Week	-20 - 45°C
Storage Period 1 Month	-10 - 45°C
Storage Period 6 Months	0 - 35°C

BATTERY PROTECTION

Over Charge	4.275 ± 50mV
Over Discharge	2.5V ± 50mV
Over Current	3A to 5A
Short Circuit	Yes

MECHANICAL SPECIFICATIONS

Dimensions	51x 26 x 5 mm(L*W*T)
Weight	Around 11 g
Battery Terminals	WC/ FL *

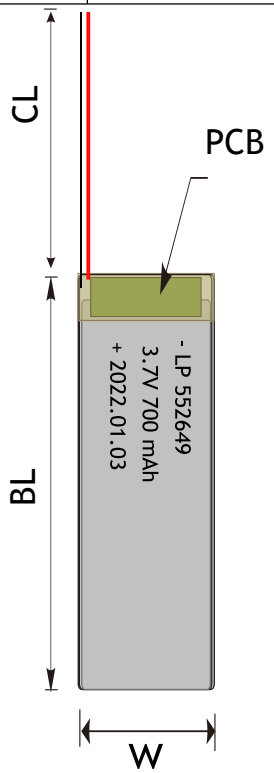

CERTIFICATION

Certification Approval	PLEASE CONSULT SALES

* WC=With Connector FL=Flying Leads UWP=Blue Wrapped PVC
BWP=Black Wrapped PVC BC= Bare Cell

RELATIVE CURVES

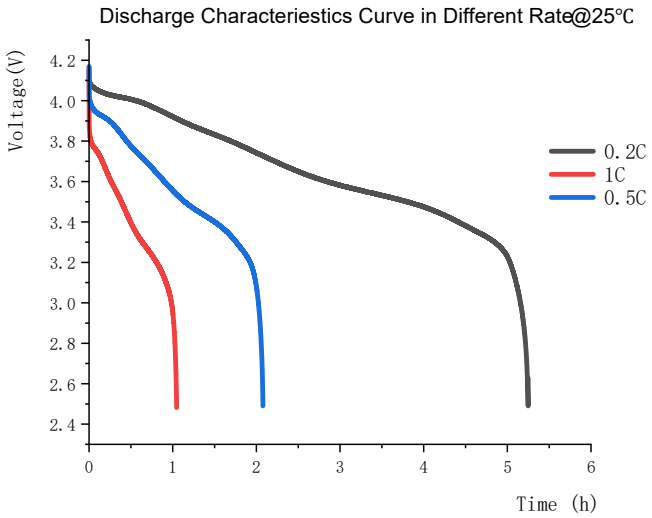

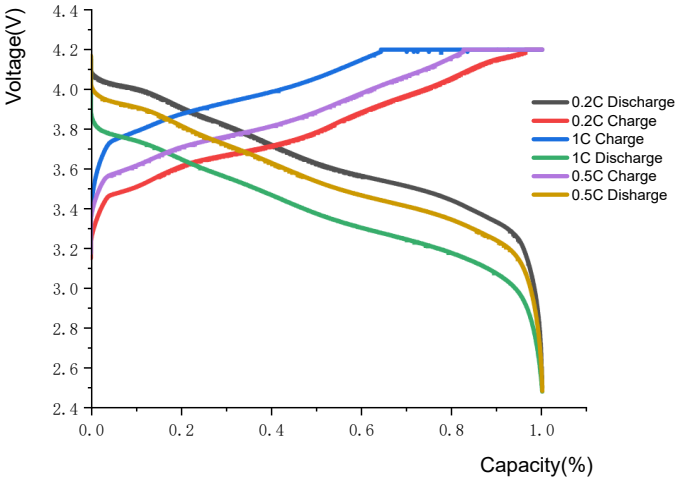

ANNOUNCEMENT

- Avoid passive or active short-circuiting of the battery.
- Never allow the temperature of Batteries to exceed 120°F / 49°C during discharge. Adequate cooling for Batteries is required.
- During discharging and handling the batteries, do not exceed 160°F (71°C). Otherwise, the battery may be damaged and a fire may result.
- Do not mix batteries of different models or capacities.
- AVOID storing Li-ion batteries with metal objects, including in a drawer with coins.
- Place batteries suspected of being damaged into the emergency battery isolation container and monitor temperature.
- Remove Li-Ion powered devices and batteries from the charger once they are fully charged.
- If you notice hot cells, disconnect the charger and remove any external short circuit if present.
- Obtain container to safely transport LiPo batteries between the labs and use locations. Remove from vehicle once at the destination.
- Have a class ABC or CO2 fire extinguisher nearby the storage area.
- If you notice hot cells, disconnect the charger and remove any external short circuit if present.