3.7V Lithium Polymer Battery Data Sheet

Model: 552537

Please Find More:

https://www.fpbattery.com/3-7v-500mah-lithium-polymer-battery/

File Number: A/FP2537-11819

File Version: 01

CONTACT

CUSTOMER SERVICE
86.755.3682.7358
sales@fpbattery.com
Hours of Operation:
9:00am-6:00pm CST, Monday to Friday

LEARN MORE ON:
https://www.fpbattery.com/

DNK POWER COMPANY LIMITED

BATTERY SPECIFICATION

Part Number	DNK 552537
Nominal Voltage	3.7 V
Nominal Capacity	510 mAh
Internal Impedence	<60mΩ
Charge Voltage	4.2V
Recommended Charge Current	0.2 C
Allowed Max Charge Current	0.5 C
Output Voltage Range	4.2 - 2.5 V
Recommended Discharge Current	0.2 C
Max Continuous Discharge Current	1 C
Pulse Discharge Current	3 C (10 mS)
Discharge Cut-off Voltage	2.5± 0.05V
Cycle Life to 80% Health	500 (0.2C, 25°C)

1 YEAR WARRANTY

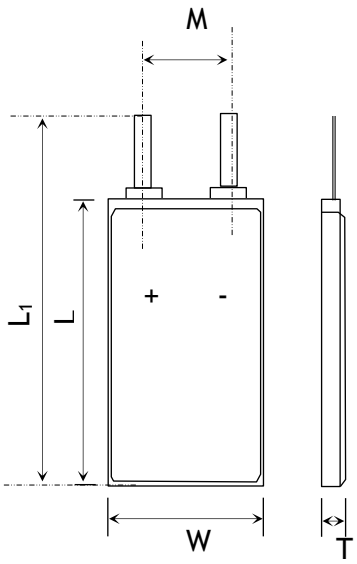

Item	Parameter (mm)
T	5
W	25
M	10
L	37
L_1	39
BL	39 ± 1
CL	100

ENVIRONMENTAL SPECIFICATIONS

Charging Temperature Range	0 - 45°C
Discharging Temperature Range	-20 - 60°C
Storage Period 1 Week	-20 - 45°C
Storage Period 1 Month	-10 - 45°C
Storage Period 6 Months	0 - 35°C

BATTERY PROTECTION

Over Charge	4.275 ± 50mV
Over Discharge	2.5V ± 50mV
Over Current	3A to 5A
Short Circuit	Yes

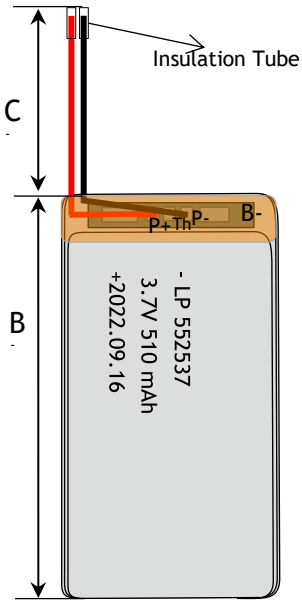

MECHANICAL SPECIFICATIONS

Dimensions	39x 25 x 5 mm(L*W*T)
Weight	Around 8 g
Battery Terminals	WC/ FL *

Kapton Tape



CERTIFICATION

Certification Approval	PLEASE CONSULT SALES

* WC=With Connector FL=Flying Leads UWP=Blue Wrapped PVC BWP=Black Wrapped PVC BC= Bare Cell

RELATIVE CURVES

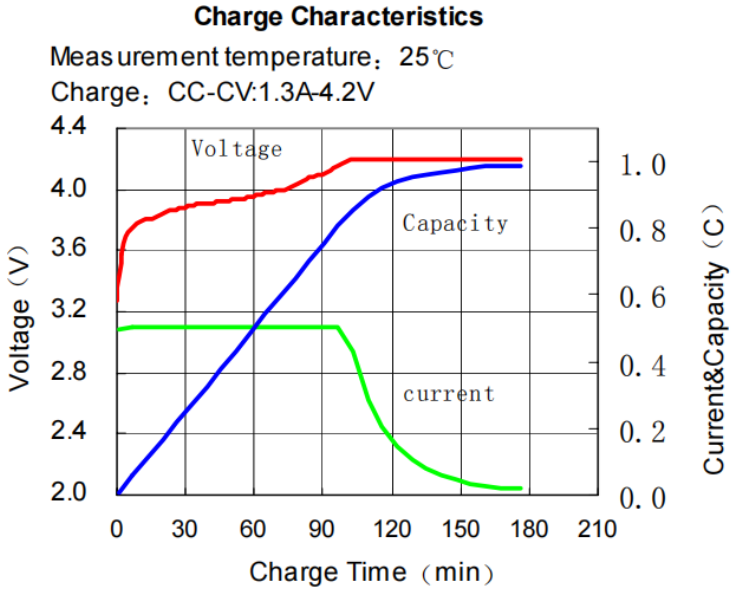

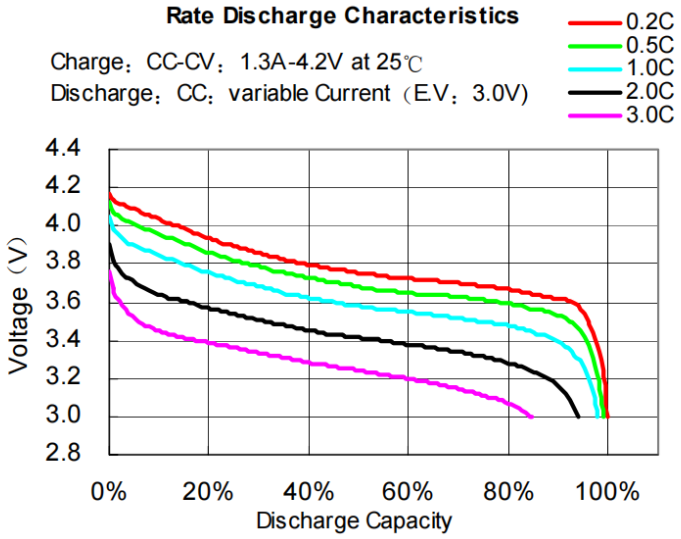

ANNOUNCEMENT

- Do not place the battery on flammable materials near a fire source.
- Do not use batteries with physical damage, such as dented, cracked or leaking batteries.
- Never remove the battery from its protective plastic case.
- Always follow the manufacturer’s safety instructions
- Never keep sharp objects near Lipos. This may cause a hole in the pack and can lead to a fire.
- Misuse of a Lipo battery may result in the battery generating excessive heat, igniting or exploding. Keep batteries out of the reach of children.
- ALWAYS use the charging cord supplied with the device (or only use a replacement charging cord that is specified by the device manufacturer to bean approved alternative).
- Security or other responsible staff on site who may be called to take action in an emergency should be made aware of the location of the charging area, the means for isolating the power and the action to take in an emergency.
- Higher cell voltage during storage will increase the self-discharge rate of the battery, which may lead to over-discharge and deteriorate battery performance. It is recommended that the battery remain at a lower voltage (about 3.8V/cell) throughout the period of storage. If the battery is to be stored for longer than one year, the user should charge the battery at least once per year to 3.8V/cell to prevent over-discharge.
- Do not charge LiPo batteries in the model as you can not successfully monitor and move them quickly if necessary.
- Protect from the frost, and also temperatures above 60 degrees Centigrade. Batteries should never be in the sun, on hot surfaces.