3.7V Lithium Polymer Battery Data Sheet

Model: 552443

Please Find More:

https://www.fpbattery.com/3-7v-500mah-lithium-polymer-battery/

File Number: A/FP2443-16765

File Version: 01

CONTACT

CUSTOMER SERVICE
86.755.3682.7358
sales@fpbattery.com
Hours of Operation:
9:00am-6:00pm CST, Monday to Friday

LEARN MORE ON:
https://www.fpbattery.com/

DNK POWER COMPANY LIMITED

BATTERY SPECIFICATION

Part Number	DNK 552443
Nominal Voltage	3.7 V
Nominal Capacity	570 mAh
Internal Impedence	<60mΩ
Charge Voltage	4.2V
Recommended Charge Current	0.2 C
Allowed Max Charge Current	0.5 C
Output Voltage Range	4.2 - 2.5 V
Recommended Discharge Current	0.2 C
Max Continuous Discharge Current	1 C
Pulse Discharge Current	3 C (10 mS)
Discharge Cut-off Voltage	2.5± 0.05V
Cycle Life to 80% Health	500 (0.2C, 25°C)

1

1 YEAR WARRANTY

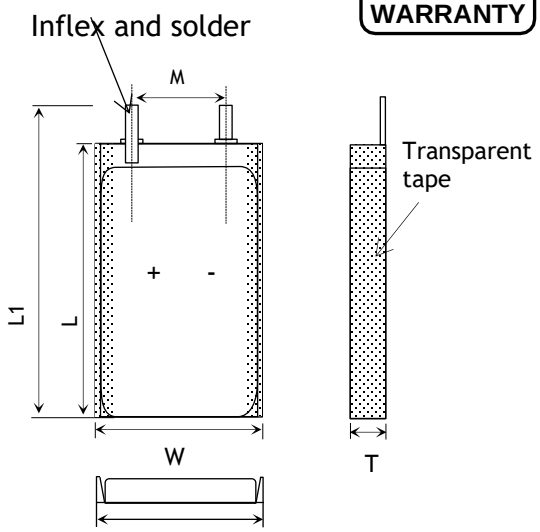

Item	Parameter (mm)
T	5
W	24
M	10
L	43
L_1	45
BL	45 ± 1
CL	100

ENVIRONMENTAL SPECIFICATIONS

Charging Temperature Range	0 - 45°C
Discharging Temperature Range	-20 - 60°C
Storage Period 1 Week	-20 - 45°C
Storage Period 1 Month	-10 - 45°C
Storage Period 6 Months	0 - 35°C

BATTERY PROTECTION

Over Charge	4.275 ± 50mV
Over Discharge	2.5V ± 50mV
Over Current	3A to 5A
Short Circuit	Yes

MECHANICAL SPECIFICATIONS

Dimensions	45x 24 x 5 mm(L*W*T)
Weight	9 g
Battery Terminals	WC/ FL *

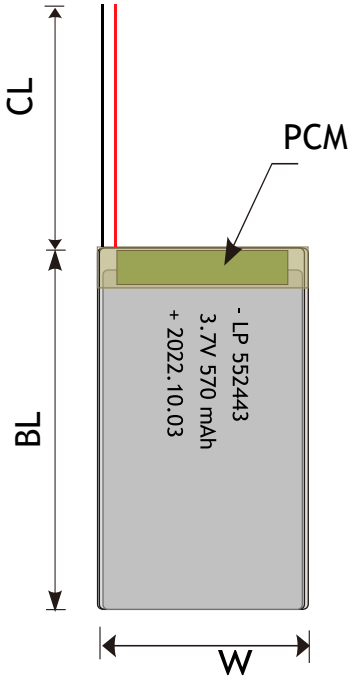

CERTIFICATION

Certification Approval	PLEASE CONSULT SALES

* WC=With Connector FL=Flying Leads UWP=Blue Wrapped PVC BWP=Black Wrapped PVC BC= Bare Cell

BULK PRODUCTION ACTUAL PICTURES



BARE CELL (BC)



FLYING LEADS (FL)



WITH CONNECTOR (WC)



BLUE WRAPPED PVC (UWP)



BLACK WRAPPED PVC (BWP)

3.7V LIPO BATTERY OPTIONS



Special Ingredients to make batteries work from -40 -85 ° C



Discharging Current up to 100C



Popular JST,Molex,Hirose,Anderson available



LED Power Indicator



Power Button



Upgrade to LifePo4 tech and life circle up to 1500

RELATIVE CURVES

Charge & Discharge Characteriestics in different Rate@25℃

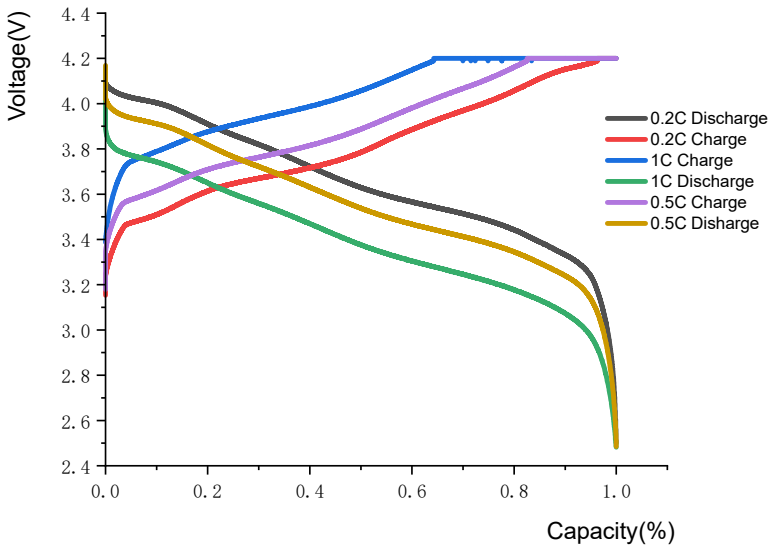

State of Charge Characteriestics @1C 25℃

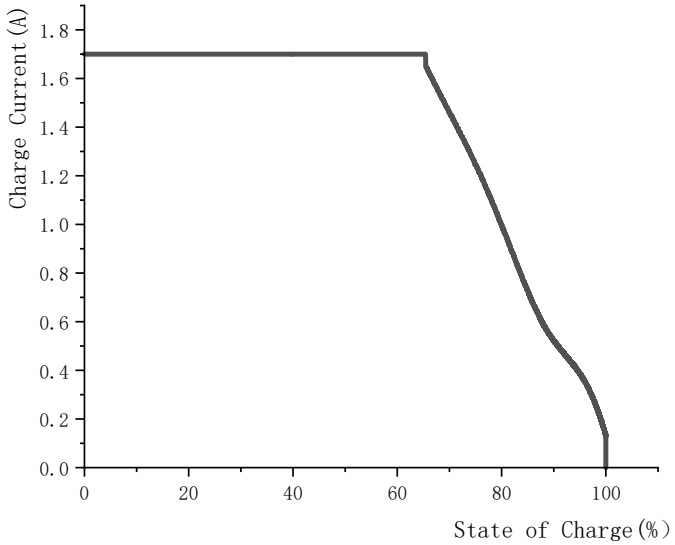

ANNOUNCEMENT

- Keep Lipo batteries away from heal! And direct sunlight, and do not Store ma car during hot weather. Never use a Lipo that is leaking or gives off a strong odor, or has been damaged many way.
- Do not store the battery in direct sunlight.
- Do not discharge the battery at a higher current than the maximum continuous discharging current. A higher discharging current may cause overheating which will lead to ballooning, swelling, or possibly result in fire. For example, a 5000mAh battery with a designed maximum 35C discharge current must not have a continuous discharge rate or load of more than 175 Amps. For longer cycle life, a continuous discharging current of 70%-80% of the designed maximum discharging current is acceptable and recommended.
- Discharge the battery to 50% before storing it for an extended period of time.
- Avoid dropping batteries, dropping Lipos can cause the battery cell to crush causing an internal short which may lead to fire.
- Read the Product Specification and respect the maximum voltage (4.2V/cell). Never charge higher than 4.25V, which is the maximum voltage. Charging with a higher voltage will irreparably damage the battery and may lead to the start of a fire.
- If your skin or eyes come into contact with liquid from the battery, rinse thoroughly and notify a medical service for expert advice.
- Always charge/store Batteries in a non-conductive, fire-proof container or bag.
- Charge on a non-flammable surface (concrete, ceramic, steel) away from any flammable material
- Store lithium batteries in a dedicated, vented fire-rated cabinet. Keep combustible materials clear of the cabinet. Label cabinet as containing lithium

batteries.

- Never alter, puncture or impact Batteries or related components.