3.7V Lithium Polymer Battery Data Sheet

Model: 552439

Please Find More:

https://www.fpbattery.com/3-7v-5500mah-lithium-polymer-battery/

File Number: A/FP2439-14447

File Version: 01

CONTACT

CUSTOMER SERVICE
86.755.3682.7358
sales@fpbattery.com
Hours of Operation:
9:00am-6:00pm CST, Monday to Friday

LEARN MORE ON:
https://www.fpbattery.com/

DNK POWER COMPANY LIMITED

BATTERY SPECIFICATION

Part Number	DNK 552439
Nominal Voltage	3.7 V
Nominal Capacity	515 mAh
Internal Impedence	<60mΩ
Charge Voltage	4.2V
Recommended Charge Current	0.2 C
Allowed Max Charge Current	0.5 C
Output Voltage Range	4.2 - 2.5 V
Recommended Discharge Current	0.2 C
Max Continuous Discharge Current	1 C
Pulse Discharge Current	3 C (10 mS)
Discharge Cut-off Voltage	2.5± 0.05V
Cycle Life to 80% Health	500 (0.2C, 25°C)

1

1 YEAR WARRANTY

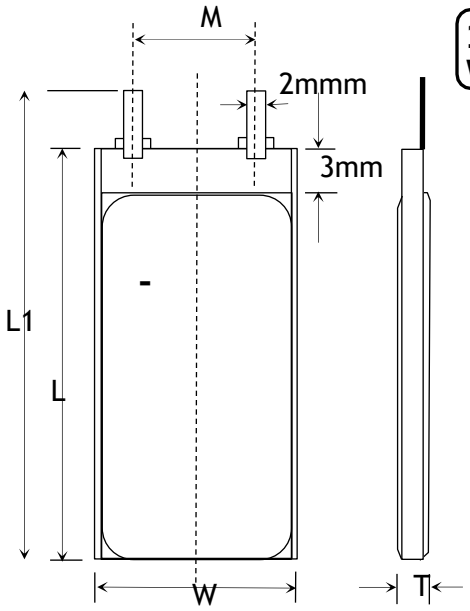

Item	Parameter (mm)
T	5
W	24
M	10
L	39
L_1	41
BL	41 ± 1
CL	100

ENVIRONMENTAL SPECIFICATIONS

Charging Temperature Range	0 - 45°C
Discharging Temperature Range	-20 - 60°C
Storage Period 1 Week	-20 - 45°C
Storage Period 1 Month	-10 - 45°C
Storage Period 6 Months	0 - 35°C

BATTERY PROTECTION

Over Charge	4.275 ± 50mV
Over Discharge	2.5V ± 50mV
Over Current	3A to 5A
Short Circuit	Yes

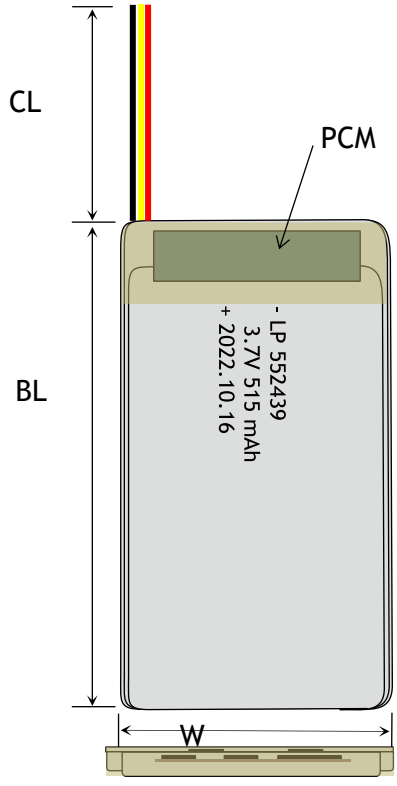

MECHANICAL SPECIFICATIONS

Dimensions	41x 24 x 5 mm(L*W*T)
Weight	Around 8 g
Battery Terminals	WC/ FL *

CERTIFICATION

Certification Approval	PLEASE CONSULT SALES

* WC=With Connector FL=Flying Leads UWP=Blue Wrapped PVC BWP=Black Wrapped PVC BC= Bare Cell

RELATIVE CURVES

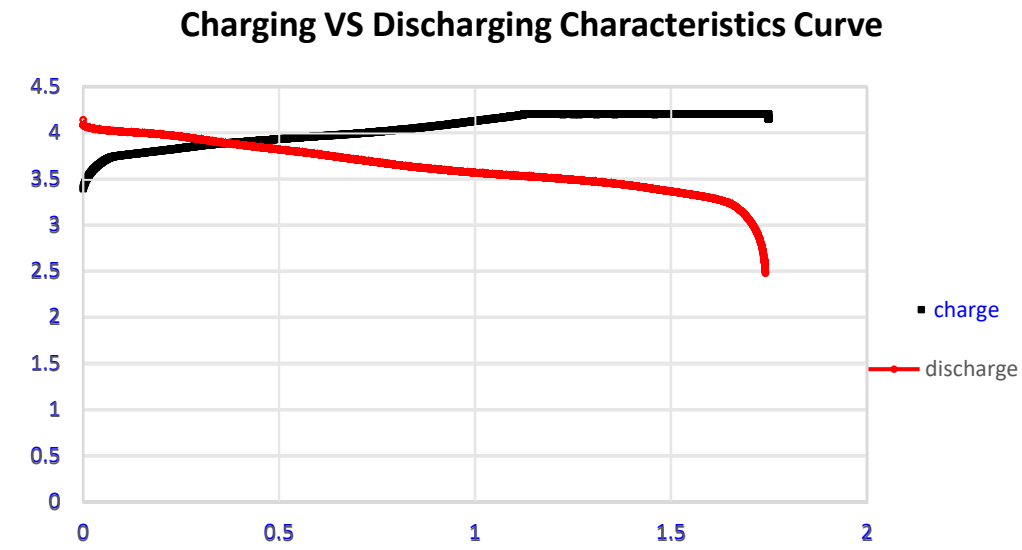

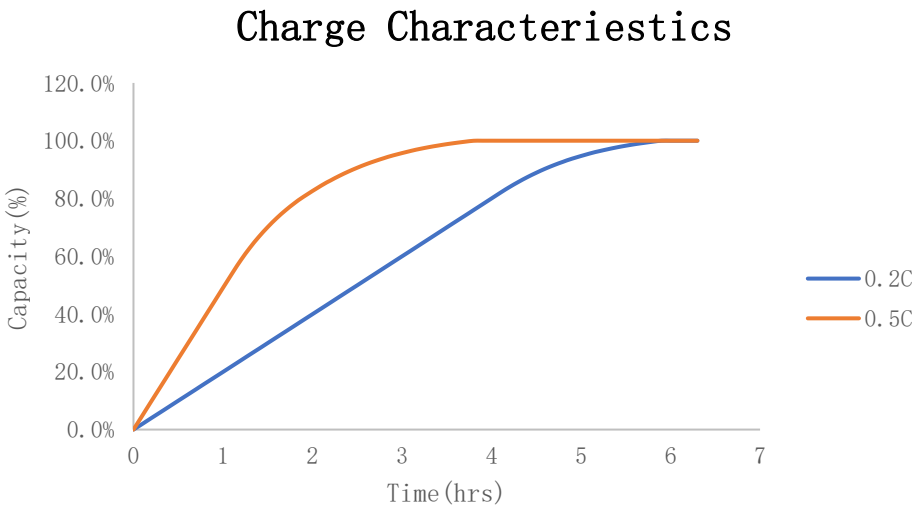

ANNOUNCEMENT

- During transportation and storage, ensure effective measures are employed to prevent shortcircuit.
- Connecting the LiPo Battery to the Charger (Read the Charger Instructions)
- Never charge the battery at a current exceeding 2C (2 x the capacity of the battery). A higher charge rate may cause fire.
- Contact EHRS if LiPo battery packs are to be fabricated in-house.
- Slow down the charging and discharging rate of the battery in low temperature environment.
- If the battery swells during charging, stop charging immediately and disconnect the battery from the charger. Leave the battery outside for a few hours and observe. Then recycle the battery according to the instructions of your country/region.
- Do not allow the battery to be fully discharged and recharge it promptly to prolong battery life.
- Do not inhale the gasses of a damaged battery or ingest the contents. If you do accidentally swallow the contents of LiPo cells seek medical attention immediately.
- Always charge batteries at a rate of 1c (one (times the capacity unless specified by the manufacturer
- Always set the charger to proper cell count and/or voltage listed on Batteries' labels.
- Do not dispose of the battery in the regular trash.