# 3.7V Lithium Polymer Battery Data Sheet

Model:  552438

Please Find More:

https://www.fpbattery.com/3-7v-500mah-lithium-polymer-battery/

File Number:  A/FP2438-13670

File Version: 01


CONTACT

CUSTOMER SERVICE
86.755.3682.7358
sales@fpbattery.com
Hours of Operation:
9:00am-6:00pm CST, Monday to Friday

LEARN MORE ON:
https://www.fpbattery.com/

DNK POWER COMPANY LIMITED

## BATTERY SPECIFICATION

| | |
|---|---|
| Part Number | DNK 552438 |
| Nominal Voltage | 3.7 V |
| Nominal Capacity | 500 mAh |
| Internal Impedence | <60mΩ |
| Charge Voltage | 4.2V |
| Recommended Charge Current | 0.2 C |
| Allowed Max Charge Current | 0.5 C |
| Output Voltage Range | 4.2 - 2.5 V |
| Recommended Discharge Current | 0.2 C |
| Max Continuous Discharge Current | 1 C |
| Pulse Discharge Current | 3 C (10 mS) |
| Discharge Cut-off Voltage | 2.5± 0.05V |
| Cycle Life to 80% Health | 500 (0.2C, 25°C) |

1

**1 YEAR WARRANTY**

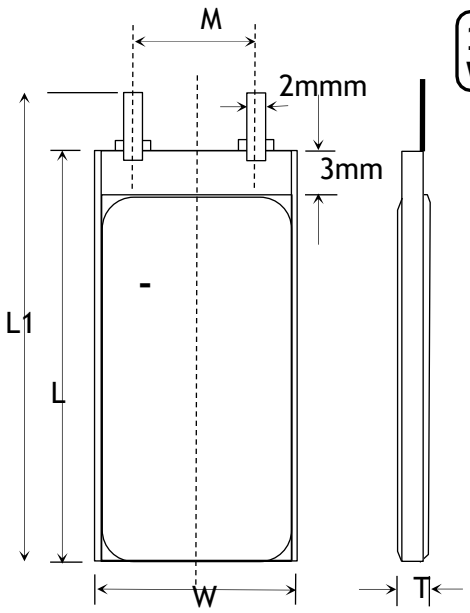


| Item | Parameter (mm) |
|---|---|
| T | 5 |
| W | 24 |
| M | 10 |
| L | 38 |
| $L_1$ | 40 |
| BL | 40 ± 1 |
| CL | 100 |

## ENVIRONMENTAL SPECIFICATIONS

| | |
|---|---|
| Charging Temperature Range | 0 - 45°C |
| Discharging Temperature Range | -20 - 60°C |
| Storage Period 1 Week | -20 - 45°C |
| Storage Period 1 Month | -10 - 45°C |
| Storage Period 6 Months | 0 - 35°C |

## BATTERY PROTECTION

| | |
|---|---|
| Over Charge | 4.275 ± 50mV |
| Over Discharge | 2.5V ± 50mV |
| Over Current | 3A to 5A |
| Short Circuit | Yes |

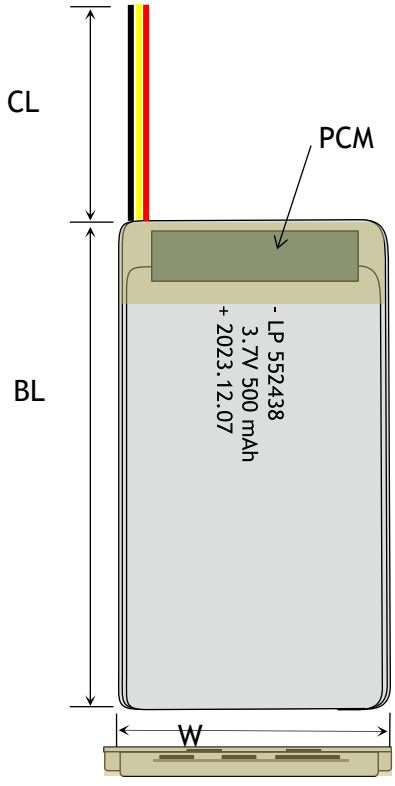


## MECHANICAL SPECIFICATIONS

| | |
|---|---|
| Dimensions | 40x 24 x 5 mm(L*W*T) |
| Weight | Around 8 g |
| Battery Terminals | WC/ FL * |

## CERTIFICATION

| | |
|---|---|
| Certification Approval | PLEASE CONSULT SALES |

* WC=With Connector FL=Flying Leads UWP=Blue Wrapped PVC BWP=Black Wrapped PVC BC= Bare Cell

# RELATIVE CURVES

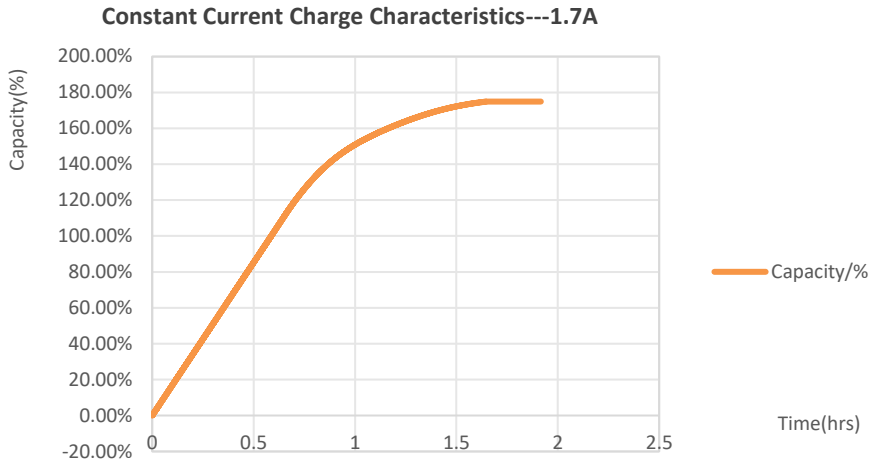


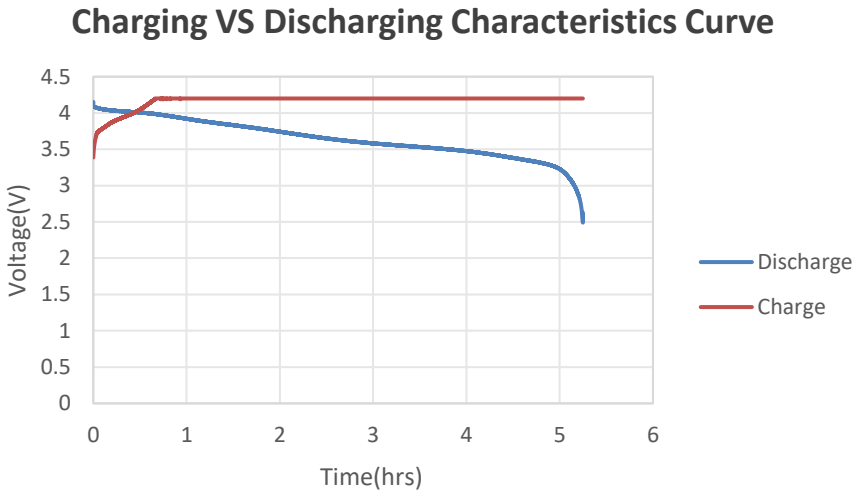


# ANNOUNCEMENT

- Do not expose the battery to strong acids or alkalis.
- Never leave a battery unattended while charging. During the entire process of charging your LiPo battery, you must constantly observe and monitor the charging process so that you can quickly react to any problems that may occur and to be certain that the battery is being charged properly.
- Never put batteries in your pocket or non fireproof bags this may cause the battery to short circuit.
- Then recycle the battery according to the instructions of your country/region. Never dispose of a LIPO battery with domestic waste.
- Always charge the LiPo battery outdoors or in a ventilated area away from flammable objects and surfaces.
- Do not mix different types of batteries or mix new and old ones together (e.g. in a power pack).
- Heat kills Lipos, the hotter a battery gets, the shorter the lifespan will be.
- Avoid storing unused batteries for long periods of time, and perform regular battery maintenance and charging.
- Avoid bumping or dropping the battery to prevent damage or internal short circuit.
- ALWAYS constantly supervise LiPo batteries on charge and NEVER LEAVE UNATTENDED.
- Use recommended methods to make battery terminal connections.