# 3.7V Lithium Polymer Battery Data Sheet

Model: 504047

Please Find More:

https://www.fpbattery.com/3-7v-900mah-lithium-polymer-battery/

File Number: A/FP4047-5772

File Version: 01


CONTACT

CUSTOMER SERVICE
86.755.3682.7358
sales@fpbattery.com
Hours of Operation:
9:00am-6:00pm CST, Monday to Friday

LEARN MORE ON:
https://www.fpbattery.com/

DNK POWER COMPANY LIMITED

## BATTERY SPECIFICATION

| | |
|---|---|
| Part Number | DNK 504047 |
| Nominal Voltage | 3.7 V |
| Nominal Capacity | 940 mAh |
| Internal Impedence | <60mΩ |
| Charge Voltage | 4.2V |
| Recommended Charge Current | 0.2 C |
| Allowed Max Charge Current | 0.5 C |
| Output Voltage Range | 4.2 - 2.5 V |
| Recommended Discharge Current | 0.2 C |
| Max Continuous Discharge Current | 1 C |
| Pulse Discharge Current | 3 C (10 mS) |
| Discharge Cut-off Voltage | 2.5± 0.05V |
| Cycle Life to 80% Health | 500 (0.2C, 25°C) |

1

**1 YEAR WARRANTY**

Inflex and soler

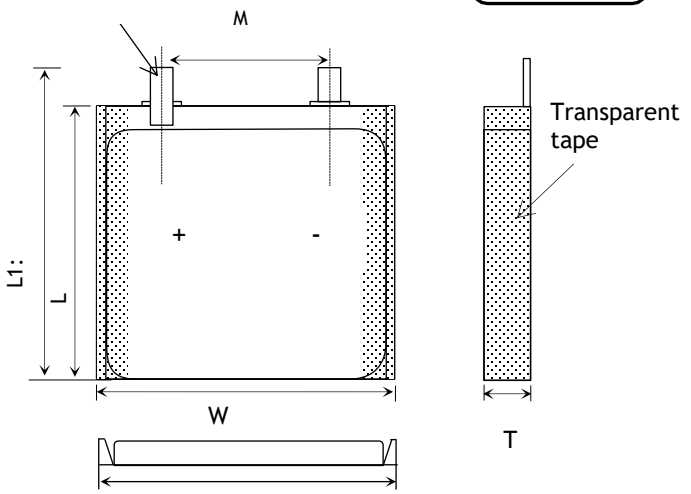


| Item | Parameter (mm) |
|---|---|
| T | 5 |
| W | 40 |
| M | 10 |
| L | 47 |
| $L_1$ | 49 |
| BL | 49 ± 1 |
| CL | 100 |

## ENVIRONMENTAL SPECIFICATIONS

| | |
|---|---|
| Charging Temperature Range | 0 - 45°C |
| Discharging Temperature Range | -20 - 60°C |
| Storage Period 1 Week | -20 - 45°C |
| Storage Period 1 Month | -10 - 45°C |
| Storage Period 6 Months | 0 - 35°C |

## BATTERY PROTECTION

| | |
|---|---|
| Over Charge | 4.275 ± 50mV |
| Over Discharge | 2.5V ± 50mV |
| Over Current | 3A to 5A |
| Short Circuit | Yes |

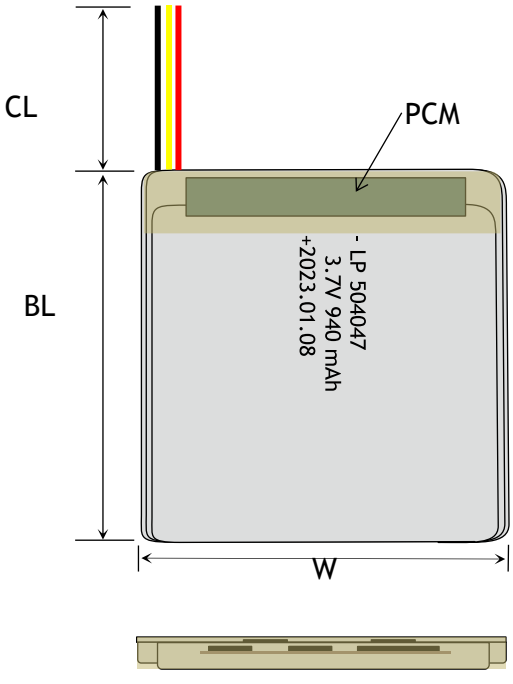


## MECHANICAL SPECIFICATIONS

| | |
|---|---|
| Dimensions | 49x 40 x 5 mm(L*W*T) |
| Weight | Around 15 g |
| Battery Terminals | WC/ FL * |

## CERTIFICATION

| | |
|---|---|
| Certification Approval | PLEASE CONSULT SALES |

* aWC=With Connector FL=Flying Leads UWP=Blue Wrapped PVC
BWP=Black Wrapped PVC BC= Bare Cell

## BULK PRODUCTION ACTUAL PICTURES



BARE CELL (BC)




FLYING LEADS (FL)




WITH CONNECTOR (WC)



BLUE WRAPPED PVC (UWP)



BLACK WRAPPED PVC (BWP)

## 3.7V LIPO BATTERY OPTIONS



Special Ingredients to make batteries work from -40 -85 ° C



Discharging Current up to 100C



Popular JST,Molex,Hirose,Anderson available



LED Power Indicator



Power Button



Upgrade to LifePo4 tech and life circle up to 1500

# RELATIVE CURVES

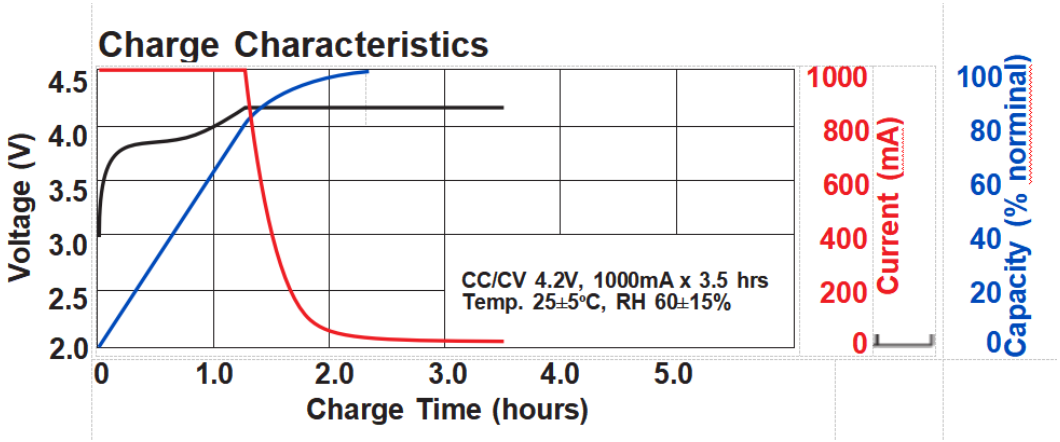


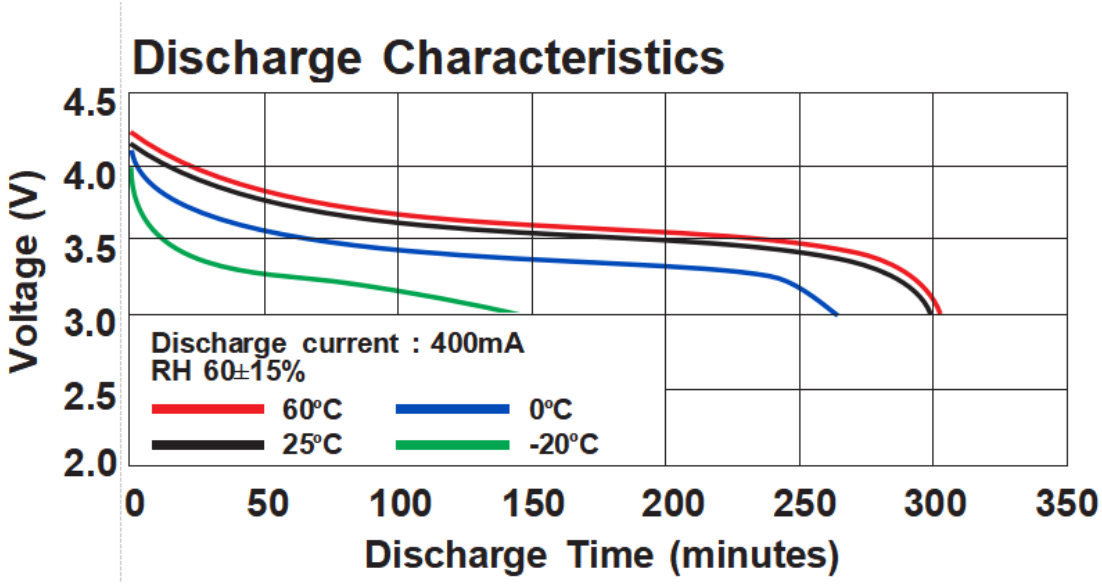


# ANNOUNCEMENT

- Do not expose the battery to high temperatures to avoid overheating.
- Do not store batteries with metal.
- NEVER use water to try and extinguish a LiPo fire. Water acts like petrol on a LiPo battery fire.
- Never charge a LiPo battery near an exit. Keep exit egress clear in case of a fire or emergency.
- Discharge the battery to 50% before storing it for an extended period of time.
- Avoid physical damage and short circuiting.
- Never leave a charging LiPo battery pack unattended. Never store batteries inside of an automobile.
- Do not leave Lipo batteries unattended while charging.
- Do not use batteries with physical damage, such as dented, cracked or leaking batteries.
- Keep Lipo batteries away from heal! And direct sunlight, and do not Store ma car during hot weather. Never use a Lipo that is leaking or gives off a strong odor, or has been damaged many way.
- Never put LiPo batteries or battery packs in pockets, drawers or bags where they might make contact with something made of metal. This can cause a short circuit.