3.7V Lithium Polymer Battery Data Sheet

Model: 503742

Please Find More:

https://www.fpbattery.com/3-7v-750mah-lithium-polymer-battery/

File Number: A/FP3742-4927

File Version: 01

CONTACT

CUSTOMER SERVICE
86.755.3682.7358
sales@fpbattery.com
Hours of Operation:
9:00am-6:00pm CST, Monday to Friday

LEARN MORE ON:
https://www.fpbattery.com/

DNK POWER COMPANY LIMITED

BATTERY SPECIFICATION

Part Number	DNK 503742
Nominal Voltage	3.7 V
Nominal Capacity	775 mAh
Internal Impedence	<60mΩ
Charge Voltage	4.2V
Recommended Charge Current	0.2 C
Allowed Max Charge Current	0.5 C
Output Voltage Range	4.2 - 2.5 V
Recommended Discharge Current	0.2 C
Max Continuous Discharge Current	1 C
Pulse Discharge Current	3 C (10 mS)
Discharge Cut-off Voltage	2.5± 0.05V
Cycle Life to 80% Health	500 (0.2C, 25°C)

1

1 YEAR WARRANTY

Inflex and soler

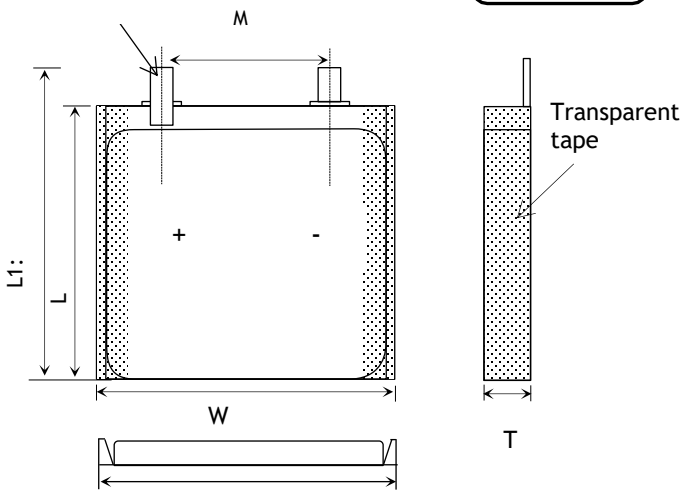

Item	Parameter (mm)
T	5
W	37
M	10
L	42
L_1	44
BL	44 ± 1
CL	100

ENVIRONMENTAL SPECIFICATIONS

Charging Temperature Range	0 - 45°C
Discharging Temperature Range	-20 - 60°C
Storage Period 1 Week	-20 - 45°C
Storage Period 1 Month	-10 - 45°C
Storage Period 6 Months	0 - 35°C

BATTERY PROTECTION

Over Charge	4.275 ± 50mV
Over Discharge	2.5V ± 50mV
Over Current	3A to 5A
Short Circuit	Yes

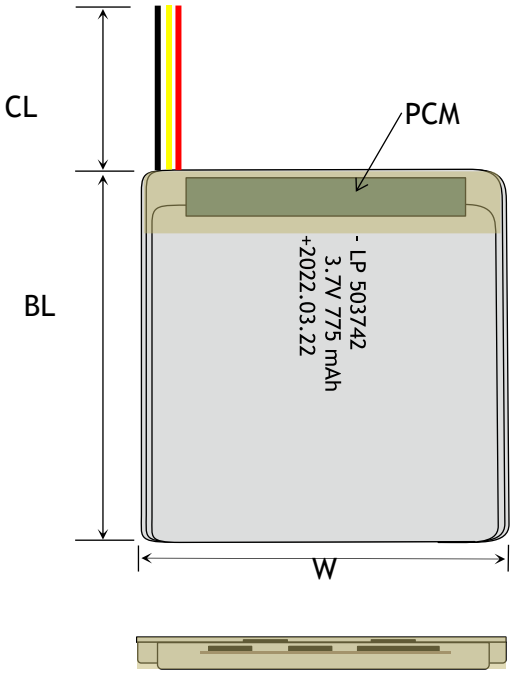

MECHANICAL SPECIFICATIONS

Dimensions	44x 37 x 5 mm(L*W*T)
Weight	Around 12 g
Battery Terminals	WC/ FL *

CERTIFICATION

Certification Approval	PLEASE CONSULT SALES

* aWC=With Connector FL=Flying Leads UWP=Blue Wrapped PVC
BWP=Black Wrapped PVC BC= Bare Cell

BULK PRODUCTION ACTUAL PICTURES



BARE CELL (BC)



FLYING LEADS (FL)



WITH CONNECTOR (WC)



BLUE WRAPPED PVC (UWP)



BLACK WRAPPED PVC (BWP)

3.7V LIPO BATTERY OPTIONS



Special Ingredients to make batteries work from -40 -85 ° C



Discharging Current up to 100C



Popular JST,Molex,Hirose,Anderson available



LED Power Indicator



Power Button



Upgrade to LifePo4 tech and life circle up to 1500

RELATIVE CURVES

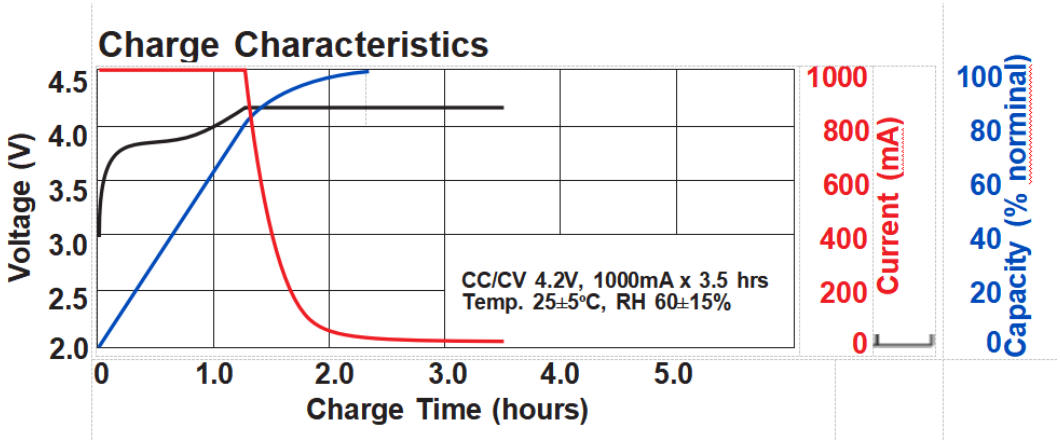

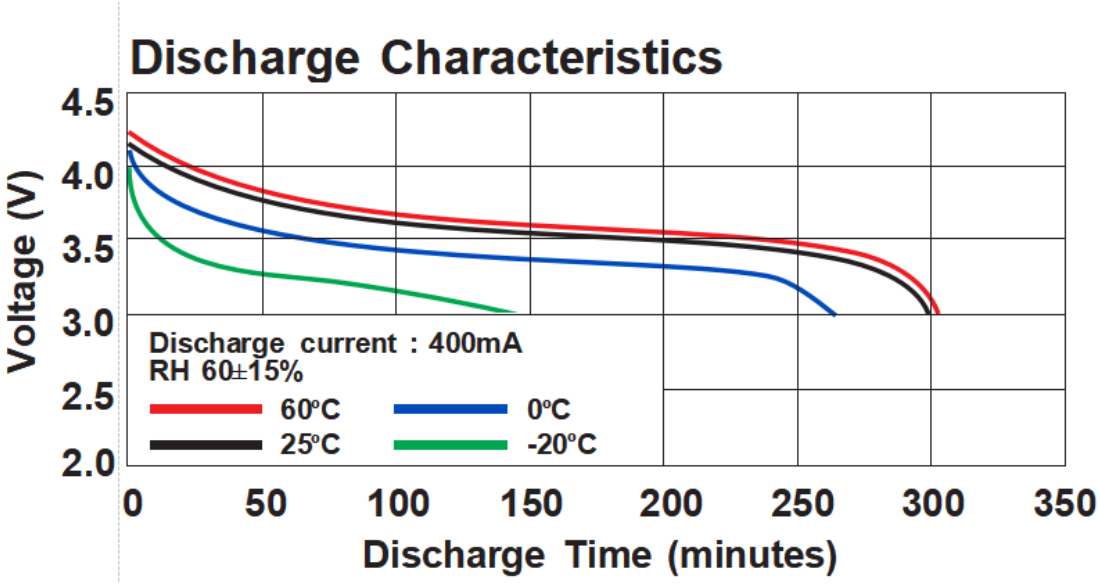

ANNOUNCEMENT

- During transportation and storage, ensure effective measures are employed to prevent shortcircuit.
- Set up dedicated charging area. Area must be free of combustible materials. Maintain space between charging batteries.
- ALWAYS use the correct battery and charger size and type that is specified for the device.
- Store behind a fire door and where a fire alarm is situated.
- If your skin or eyes come into contact with liquid from the battery, rinse thoroughly and notify a medical service for expert advice.
- The batteries must be stored within -10°C~45°C range environmental condition.
- Do not put batteries in contact with conductive materials, water, seawater, strong oxidizers
- Charge at correct rate and proper voltage for either use or storage.
- If charging indoors, only charge with a smoke detector above where you are charging.
- Use low voltage cutoff switch or monitor battery voltage while in use on equipment. Do not allow voltage to drop below 3.0 volts.
- Never charge a LiPo battery near an exit. Keep exit egress clear in case of a fire or emergency.