3.7V Lithium Polymer Battery Data Sheet

Model: 503456

Please Find More:

https://www.fpbattery.com/3-7v-900mah-lithium-polymer-battery/

File Number: A/FP3456-14731

File Version: 01

CONTACT

CUSTOMER SERVICE
86.755.3682.7358
sales@fpbattery.com
Hours of Operation:
9:00am-6:00pm CST, Monday to Friday

LEARN MORE ON:
https://www.fpbattery.com/

DNK POWER COMPANY LIMITED

BATTERY SPECIFICATION

Part Number	DNK 503456
Nominal Voltage	3.7 V
Nominal Capacity	950 mAh
Internal Impedence	<60mΩ
Charge Voltage	4.2V
Recommended Charge Current	0.2 C
Allowed Max Charge Current	0.5 C
Output Voltage Range	4.2 - 2.5 V
Recommended Discharge Current	0.2 C
Max Continuous Discharge Current	1 C
Pulse Discharge Current	3 C (10 mS)
Discharge Cut-off Voltage	2.5± 0.05V
Cycle Life to 80% Health	500 (0.2C, 25°C)

1

1 YEAR WARRANTY

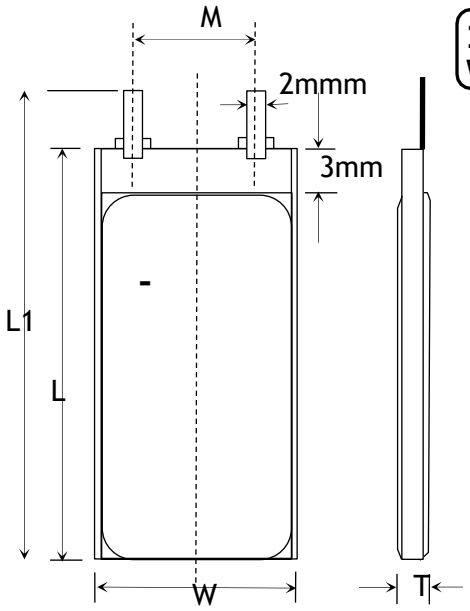

Item	Parameter (mm)
T	5
W	34
M	10
L	56
L_1	58
BL	58 ± 1
CL	100

ENVIRONMENTAL SPECIFICATIONS

Charging Temperature Range	0 - 45°C
Discharging Temperature Range	-20 - 60°C
Storage Period 1 Week	-20 - 45°C
Storage Period 1 Month	-10 - 45°C
Storage Period 6 Months	0 - 35°C

BATTERY PROTECTION

Over Charge	4.275 ± 50mV
Over Discharge	2.5V ± 50mV
Over Current	3A to 5A
Short Circuit	Yes

MECHANICAL SPECIFICATIONS

Dimensions	58x 34 x 5 mm(L*W*T)
Weight	Around 15 g
Battery Terminals	WC/ FL *

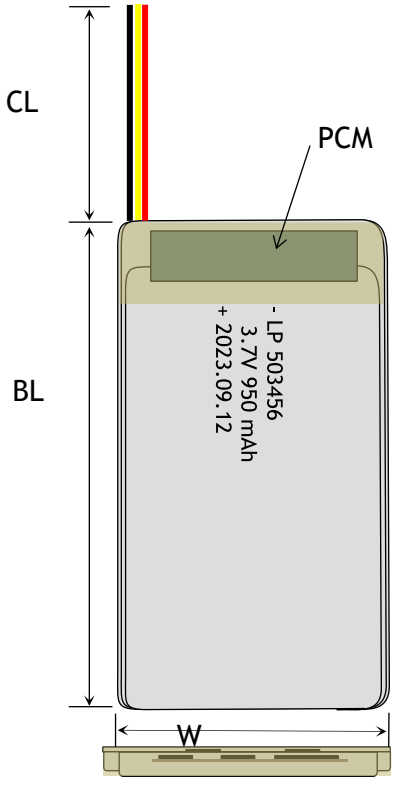

CERTIFICATION

Certification Approval	PLEASE CONSULT SALES

* WC=With Connector FL=Flying Leads UWP=Blue Wrapped PVC
BWP=Black Wrapped PVC BC= Bare Cell

RELATIVE CURVES

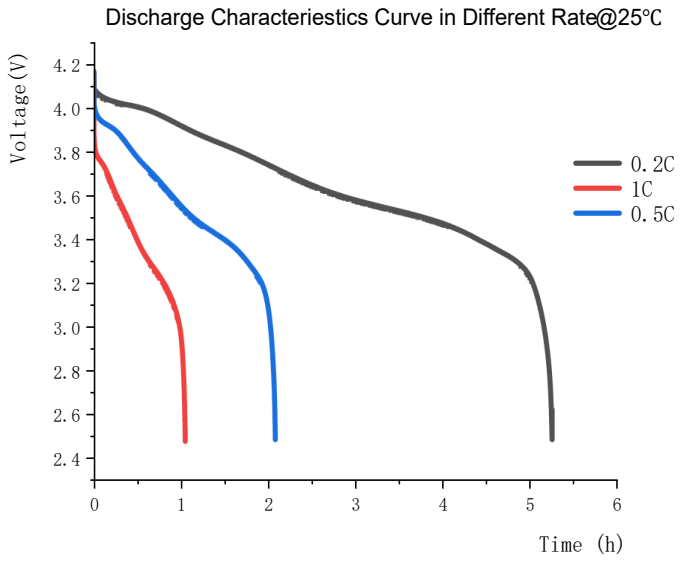

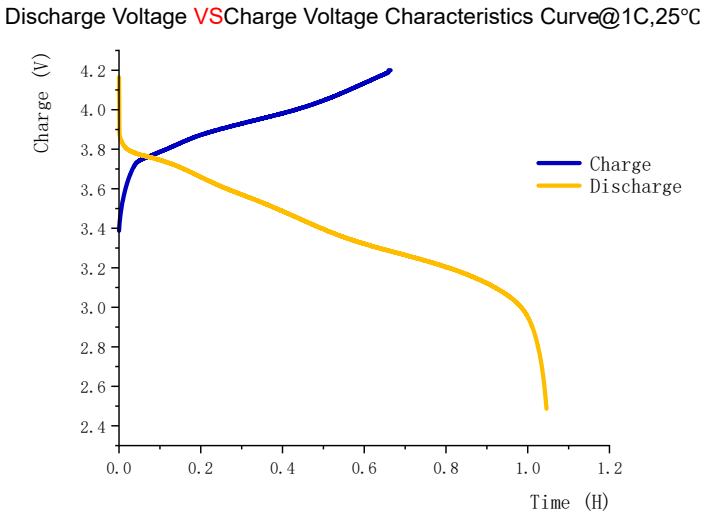

ANNOUNCEMENT

- Before starting work, if applicable, understand one-hand working techniques.
- Never charge a LiPo battery on a wooden or other combustible (carpeted) surface. Always charge LiPo batteries on surfaces made of cement, steel, ceramic or stone.
- Do not mix different types of batteries or mix new and old ones together (e.g. in a power pack).
- Never, under ANY circumstances let the positive and negative battery leads touchThis can lead to cell ballooning, cell damage, fire or an explosion. If you notice your LiPo battery pack is If necessary, put the battery in a non-combustible bucket or container and observe it for 15 minutes . swelling, disconnect the charging device immediately.
- Use the included charge lead (if applicable) for charging purposes only! DO NOT use the harness as a power adapter. Use of the charging harness as a power adapter may result in overheating of the battery connection resulting in melting of the plastic battery case.
- LiPo batteries must only be charged with a manufacturer recommended LiPo charger.
- Never store loose Batteries together, the Batteries' terminals may contact one another causing a short circuit.
- Do not discharge the battery at a higher current than the maximum continuous discharging current. A higher discharging current may cause overheating which will lead to ballooning, swelling, or possibly result in fire. For example, a 5000mAh battery with a designed maximum 35C discharge current must not have a continuous discharge rate or load of more than 175 Amps. For longer cycle life, a continuous discharging current of 70%-80% of the designed maximum discharging current is acceptable and recommended.
- Never charge Batteries inside of the model.
- Store dust free and dry and protect from moisture
- Do not expose the battery to high temperatures to avoid overheating.