3.7V Lithium Polymer Battery Data Sheet

Model: 503450

Please Find More:

https://www.fpbattery.com/3-7v-5500mah-lithium-polymer-battery/

File Number: A/FP3450-11646

File Version: 01

CONTACT

CUSTOMER SERVICE
86.755.3682.7358
sales@fpbattery.com
Hours of Operation:
9:00am-6:00pm CST, Monday to Friday

LEARN MORE ON:
https://www.fpbattery.com/

DNK POWER COMPANY LIMITED

BATTERY SPECIFICATION

Part Number	DNK 503450
Nominal Voltage	3.7 V
Nominal Capacity	850 mAh
Internal Impedence	<60mΩ
Charge Voltage	4.2V
Recommended Charge Current	0.2 C
Allowed Max Charge Current	0.5 C
Output Voltage Range	4.2 - 2.5 V
Recommended Discharge Current	0.2 C
Max Continuous Discharge Current	1 C
Pulse Discharge Current	3 C (10 mS)
Discharge Cut-off Voltage	2.5± 0.05V
Cycle Life to 80% Health	500 (0.2C, 25°C)

1 YEAR WARRANTY

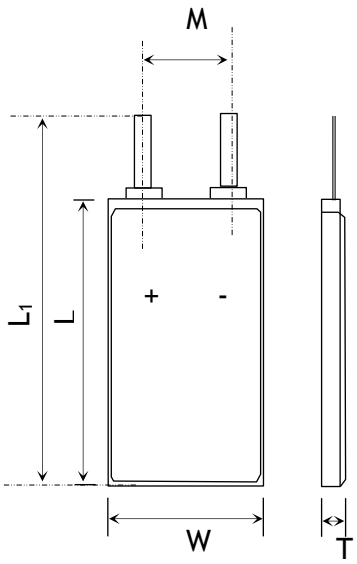

Item	Parameter (mm)
T	5
W	34
M	10
L	50
L_1	52
BL	52 ± 1
CL	100

ENVIRONMENTAL SPECIFICATIONS

Charging Temperature Range	0 - 45°C
Discharging Temperature Range	-20 - 60°C
Storage Period 1 Week	-20 - 45°C
Storage Period 1 Month	-10 - 45°C
Storage Period 6 Months	0 - 35°C

BATTERY PROTECTION

Over Charge	4.275 ± 50mV
Over Discharge	2.5V ± 50mV
Over Current	3A to 5A
Short Circuit	Yes

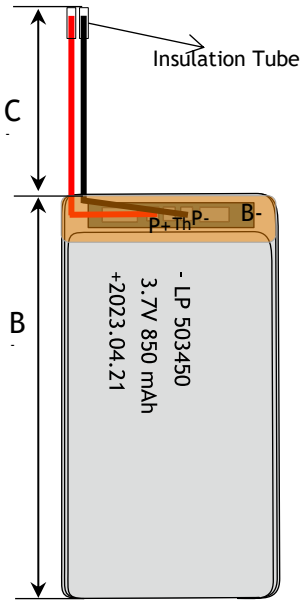

MECHANICAL SPECIFICATIONS

Dimensions	52x 34 x 5 mm(L*W*T)
Weight	Around 14 g
Battery Terminals	WC/ FL *

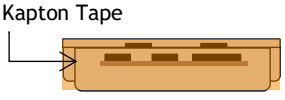

CERTIFICATION

Certification Approval	PLEASE CONSULT SALES

* WC=With Connector FL=Flying Leads UWP=Blue Wrapped PVC BWP=Black Wrapped PVC BC= Bare Cell

RELATIVE CURVES

Charge Characteristics

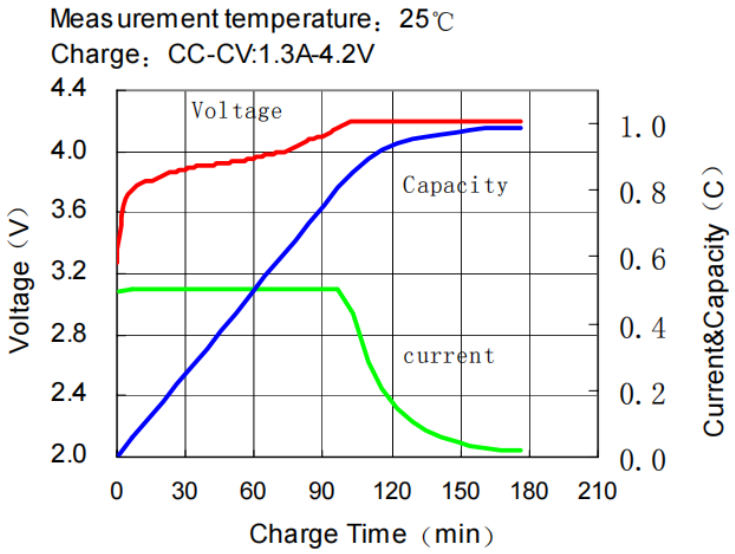

Rate Discharge Characteristics

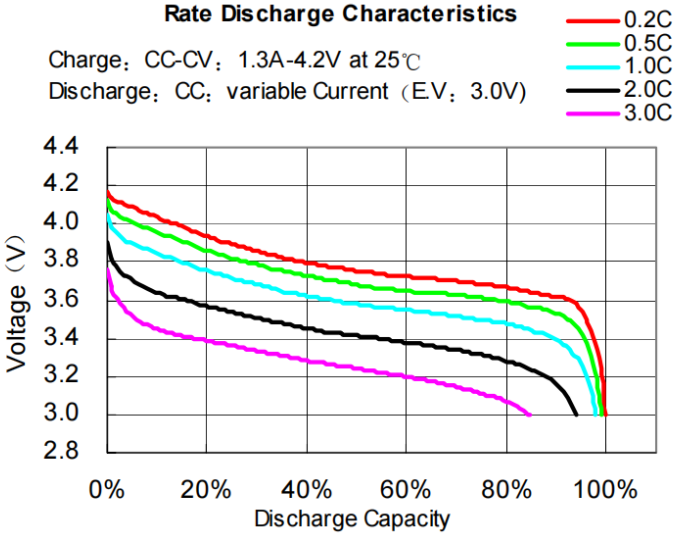

ANNOUNCEMENT

- Higher cell voltage during storage will increase the self-discharge rate of the battery, which may lead to over-discharge and deteriorate battery performance. It is recommended that the battery remain at a lower voltage (about 3.8V/cell) throughout the period of storage. If the battery is to be stored for longer than one year, the user should charge the battery at least once per year to 3.8V/cell to prevent over-discharge.
- ALWAYS use the correct battery and charger size and type that is specified for the device.
- Ensure connectors are insulated correctly to prevent short circuit in handling or storage.
- Do not charge LiPo batteries in a vehicle or in the engine compartment of a vehicle.
- Set up dedicated charging area. Area must be free of combustible materials. Maintain space between charging batteries.
- Never put batteries in your pocket or non fireproof bags this may cause the battery to short circuit.
- Do not leave Lipo batteries unattended while charging.
- Do not mix batteries of different models or capacities.
- Do not overcharge the battery and observe the charger and battery charge time instructions.
- Always charge the LiPo battery outdoors or in a ventilated area away from flammable objects and surfaces.
- If you start seeing any physical changes to the battery while discharging example puffing, STOP charging immediately and dispose of the battery responsibly.