3.7V Lithium Polymer Battery Data Sheet

Model: 503249

Please Find More:

https://www.fpbattery.com/3-7v-5500mah-lithium-polymer-battery/

File Number: A/FP3249-12722

File Version: 01

CONTACT

CUSTOMER SERVICE
86.755.3682.7358
sales@fpbattery.com
Hours of Operation:
9:00am-6:00pm CST, Monday to Friday

LEARN MORE ON:
https://www.fpbattery.com/

DNK POWER COMPANY LIMITED

BATTERY SPECIFICATION

Part Number	DNK 503249
Nominal Voltage	3.7 V
Nominal Capacity	785 mAh
Internal Impedence	<60mΩ
Charge Voltage	4.2V
Recommended Charge Current	0.2 C
Allowed Max Charge Current	0.5 C
Output Voltage Range	4.2 - 2.5 V
Recommended Discharge Current	0.2 C
Max Continuous Discharge Current	1 C
Pulse Discharge Current	3 C (10 mS)
Discharge Cut-off Voltage	2.5± 0.05V
Cycle Life to 80% Health	500 (0.2C, 25°C)

1

1 YEAR WARRANTY

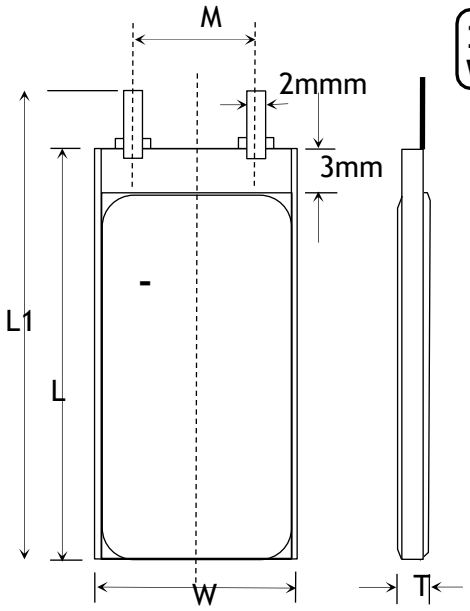

Item	Parameter (mm)
T	5
W	32
M	10
L	49
L_1	51
BL	51 ± 1
CL	100

ENVIRONMENTAL SPECIFICATIONS

Charging Temperature Range	0 - 45°C
Discharging Temperature Range	-20 - 60°C
Storage Period 1 Week	-20 - 45°C
Storage Period 1 Month	-10 - 45°C
Storage Period 6 Months	0 - 35°C

BATTERY PROTECTION

Over Charge	4.275 ± 50mV
Over Discharge	2.5V ± 50mV
Over Current	3A to 5A
Short Circuit	Yes

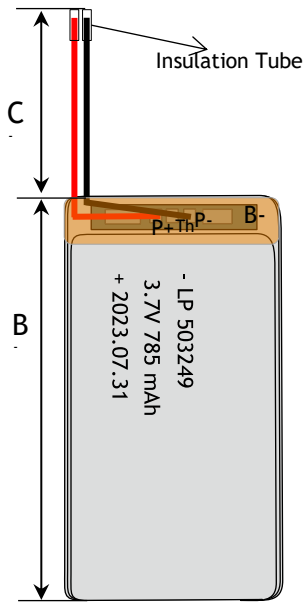

MECHANICAL SPECIFICATIONS

Dimensions	51x 32 x 5 mm(L*W*T)
Weight	Around 13 g
Battery Terminals	WC/ FL *

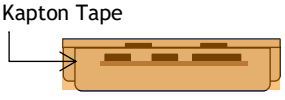

CERTIFICATION

Certification Approval	PLEASE CONSULT SALES

* WC=With Connector FL=Flying Leads UWP=Blue Wrapped PVC BWP=Black Wrapped PVC BC= Bare Cell

BULK PRODUCTION ACTUAL PICTURES



BARE CELL (BC)



FLYING LEADS (FL)



WITH CONNECTOR (WC)



BLUE WRAPPED PVC (UWP)



BLACK WRAPPED PVC (BWP)

3.7V LIPO BATTERY OPTIONS

Special Ingredients to make batteries work from -40 -85 ° C

Discharging Current up to 100C

Popular JST,Molex,Hirose,Anderson available





LED Power Indicator



Power Button

RELATIVE CURVES

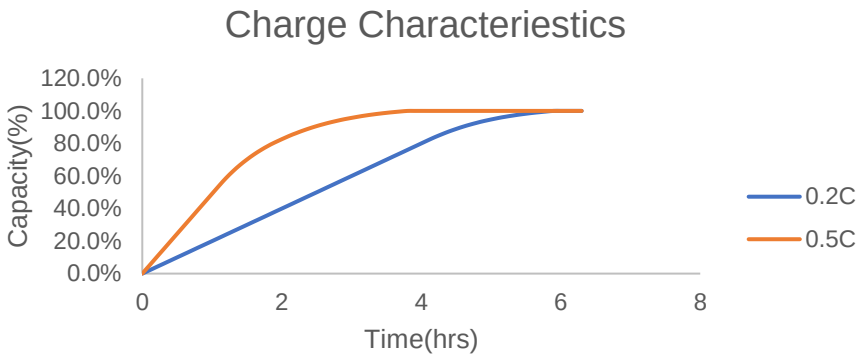

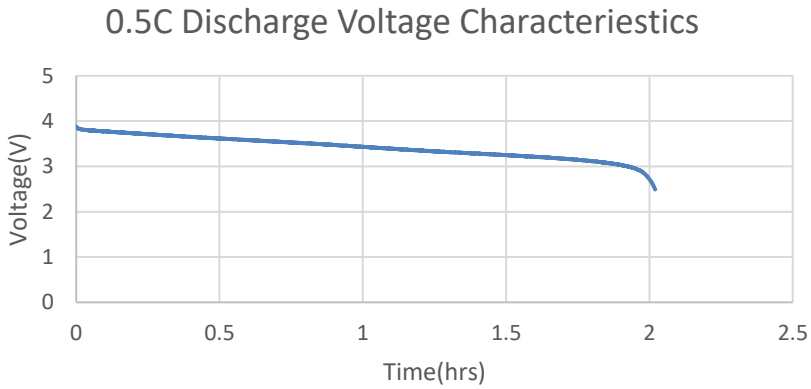

ANNOUNCEMENT

- Always check that batteries are physically and electrically undamaged before charging or discharging.
- Never charge a battery that is still warm after usage, and never use a battery that is still warm from charging.
- Never remove the battery from its protective plastic case.
- Do not use damaged battery connectors.
- Always ensure you are using the correct charger for the specific battery type you are trying to charge. Example: If you are charging a Lipo battery, only use a charger designed for Lipo batteries. If the charger can support different battery types, ensure you select the correct type. Failure to do so may cause a re, which may result in personal injury and property damage.
- Regularly check the condition of the battery. Do not use if damaged or swollen
- ALWAYS read and follow the manufacturer's instructions for charging, use, maintenance, and storage.
- Always inspect batteries for any signs of damage before use, check for physical damage such as cracks/bulges/indentations . Any battery that has been damaged, dented or pierced should be taken out of service immediately, segregated from other batteries and stored as set out below while awaiting safe disposal. Similarly, damaged goods containing batteries should also be segregated from other material and stored safely to await safe disposal.
- Use low voltage cutoff switch or monitor battery voltage while in use on equipment. Do not allow voltage to drop below 3.0 volts.
- All batteries should be stored, charged and used in accordance with the manufacturer’s instructions.
- Always disconnect and remove LiPo batteries from your model when not in use. Store LiPo batteries in an airtight and flame-resistant container when not in use.