3.7V Lithium Polymer Battery Data Sheet

Model: 503043

Please Find More:

https://www.fpbattery.com/3-7v-600mah-lithium-polymer-battery/

File Number: A/FP3043-10947

File Version: 01

CONTACT

CUSTOMER SERVICE
86.755.3682.7358
sales@fpbattery.com
Hours of Operation:
9:00am-6:00pm CST, Monday to Friday

LEARN MORE ON:
https://www.fpbattery.com/

DNK POWER COMPANY LIMITED

BATTERY SPECIFICATION

Part Number	DNK 503043
Nominal Voltage	3.7 V
Nominal Capacity	645 mAh
Internal Impedence	<60mΩ
Charge Voltage	4.2V
Recommended Charge Current	0.2 C
Allowed Max Charge Current	0.5 C
Output Voltage Range	4.2 - 2.5 V
Recommended Discharge Current	0.2 C
Max Continuous Discharge Current	1 C
Pulse Discharge Current	3 C (10 mS)
Discharge Cut-off Voltage	2.5± 0.05V
Cycle Life to 80% Health	500 (0.2C, 25°C)

1

ENVIRONMENTAL SPECIFICATIONS

Charging Temperature Range	0 - 45°C
Discharging Temperature Range	-20 - 60°C
Storage Period 1 Week	-20 - 45°C
Storage Period 1 Month	-10 - 45°C
Storage Period 6 Months	0 - 35°C

BATTERY PROTECTION

Over Charge	4.275 ± 50mV
Over Discharge	2.5V ± 50mV
Over Current	3A to 5A
Short Circuit	Yes

MECHANICAL SPECIFICATIONS

Dimensions	45x 30 x 5 mm(L*W*T)
Weight	Around 10 g
Battery Terminals	WC/ FL *

CERTIFICATION

Certification Approval	PLEASE CONSULT SALES

* WC=With Connector FL=Flying Leads UWP=Blue Wrapped PVC BWP=Black Wrapped PVC BC= Bare Cell

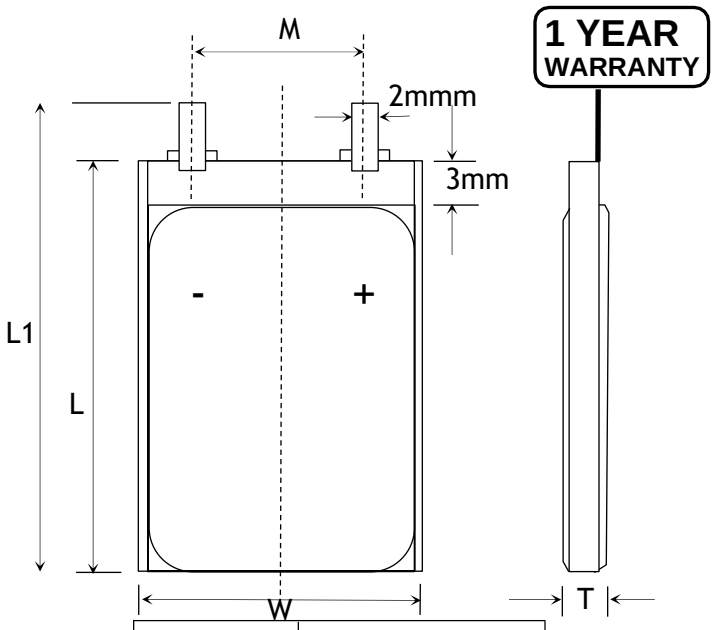

Item	Parameter (mm)
T	5
W	30
M	10
L	43
L_1	45
BL	45 ± 1
CL	100

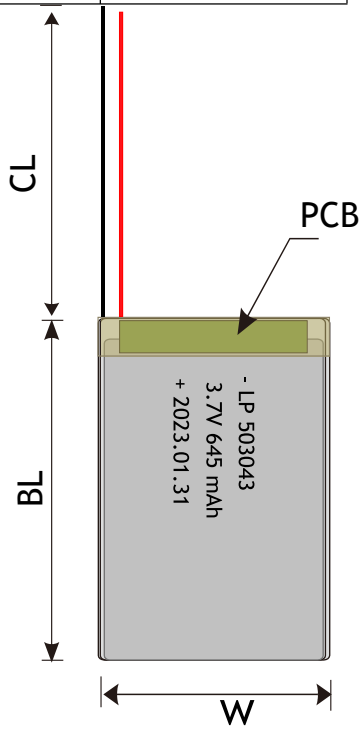

BULK PRODUCTION ACTUAL PICTURES



BARE CELL (BC)



FLYING LEADS (FL)



WITH CONNECTOR (WC)



BLUE WRAPPED PVC (UWP)



BLACK WRAPPED PVC (BWP)

3.7V LIPO BATTERY OPTIONS

Special Ingredients to make batteries work from -40 -85 ° C

Discharging Current up to 100C

Popular JST,Molex,Hirose,Anderson available





LED Power Indicator



Power Button

RELATIVE CURVES

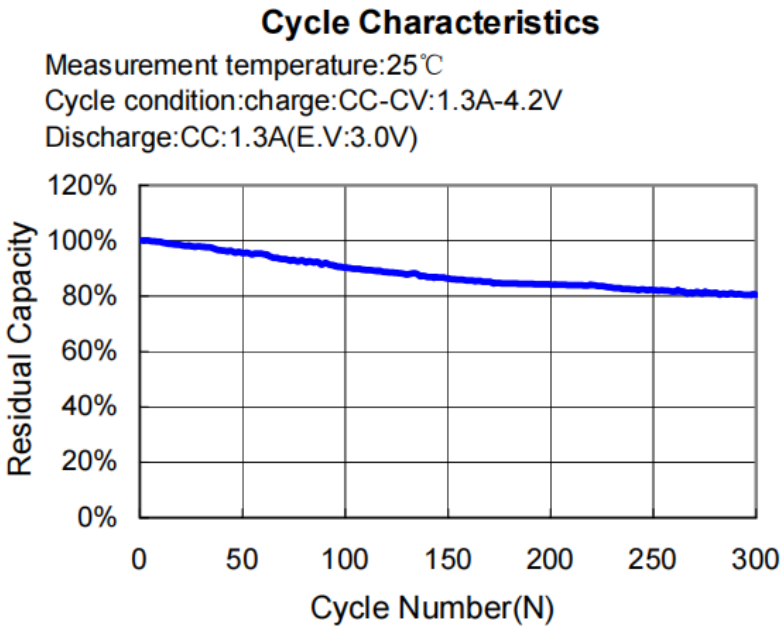

ANNOUNCEMENT

- Do not leave cells un-attended when charging. Always remain close to the charging cells to constantly monitor the charging process and react to any potential problems should they occur.
- Always charge the LiPo battery outdoors or in a ventilated area away from flammable objects and surfaces.
- Never burn, overheat, disassemble, short-circuit, solder, puncture, crush or otherwise mutilate battery packs or cells.
- Do not soak the battery with water.
- NEVER attempt to charge a one-time-use (non-rechargeable) Li-Ion or LiPo battery.
- If at anytime you notice a cell "puff up", disconnect it immediately and cover it with a fire blanket, or put it in a non-conductive container and place it outside away from all flammable objects for at least 30 minutes as chemical reactions can take this long before a fire starts.
- Do not store your cells in a hot place (i.e. in your car on a hot day) as this may cause them to catch fire or even explode.
- Always charge Batteries in an open area away from flammable materials, liquids and surfaces.
- Never put batteries in your pocket or non fireproof bags this may cause the battery to short circuit.
- NEVER put discarded batteries in piles.
- Be careful of the polarity when connecting and disconnecting batteries.