3.7V Lithium Polymer Battery Data Sheet

Model: 503040

Please Find More:

https://www.fpbattery.com/3-7v-5500mah-lithium-polymer-battery/

File Number: A/FP3040-9198

File Version: 01

CONTACT

CUSTOMER SERVICE
86.755.3682.7358
sales@fpbattery.com
Hours of Operation:
9:00am-6:00pm CST, Monday to Friday

LEARN MORE ON:
https://www.fpbattery.com/

DNK POWER COMPANY LIMITED

BATTERY SPECIFICATION

Part Number	DNK 503040
Nominal Voltage	3.7 V
Nominal Capacity	550 mAh
Internal Impedence	<60mΩ
Charge Voltage	4.2V
Recommended Charge Current	0.2 C
Allowed Max Charge Current	0.5 C
Output Voltage Range	4.2 - 2.5 V
Recommended Discharge Current	0.2 C
Max Continuous Discharge Current	1 C
Pulse Discharge Current	3 C (10 mS)
Discharge Cut-off Voltage	2.5± 0.05V
Cycle Life to 80% Health	500 (0.2C, 25°C)

1

ENVIRONMENTAL SPECIFICATIONS

Charging Temperature Range	0 - 45°C
Discharging Temperature Range	-20 - 60°C
Storage Period 1 Week	-20 - 45°C
Storage Period 1 Month	-10 - 45°C
Storage Period 6 Months	0 - 35°C

BATTERY PROTECTION

Over Charge	4.275 ± 50mV
Over Discharge	2.5V ± 50mV
Over Current	3A to 5A
Short Circuit	Yes

MECHANICAL SPECIFICATIONS

Dimensions	42x 30 x 5 mm(L*W*T)
Weight	Around 9 g
Battery Terminals	WC/ FL *

CERTIFICATION

Certification Approval	PLEASE CONSULT SALES

* WC=With Connector FL=Flying Leads UWP=Blue Wrapped PVC BWP=Black Wrapped PVC BC= Bare Cell

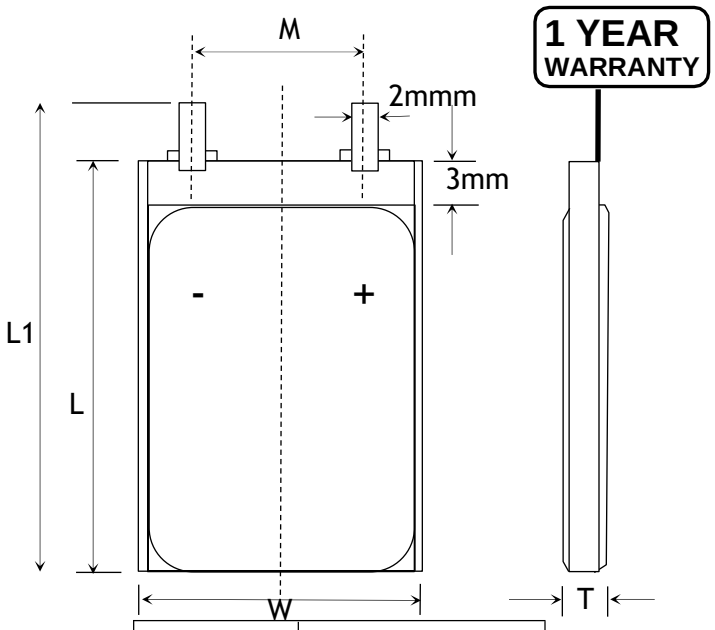

Item	Parameter (mm)
T	5
W	30
M	10
L	40
L_1	42
BL	42 ± 1
CL	100

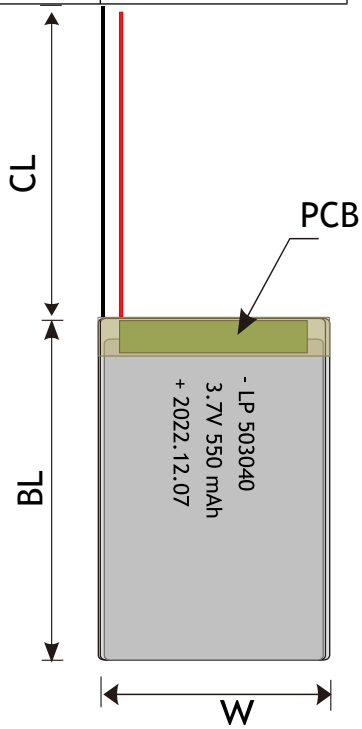

RELATIVE CURVES

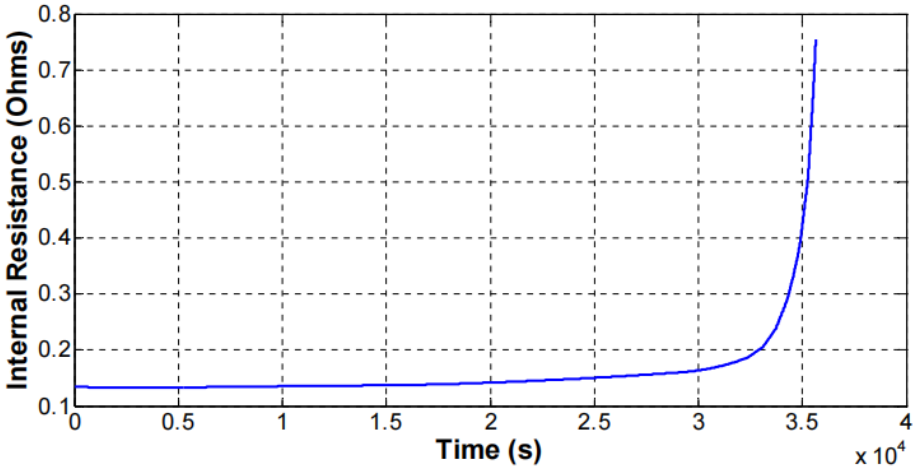

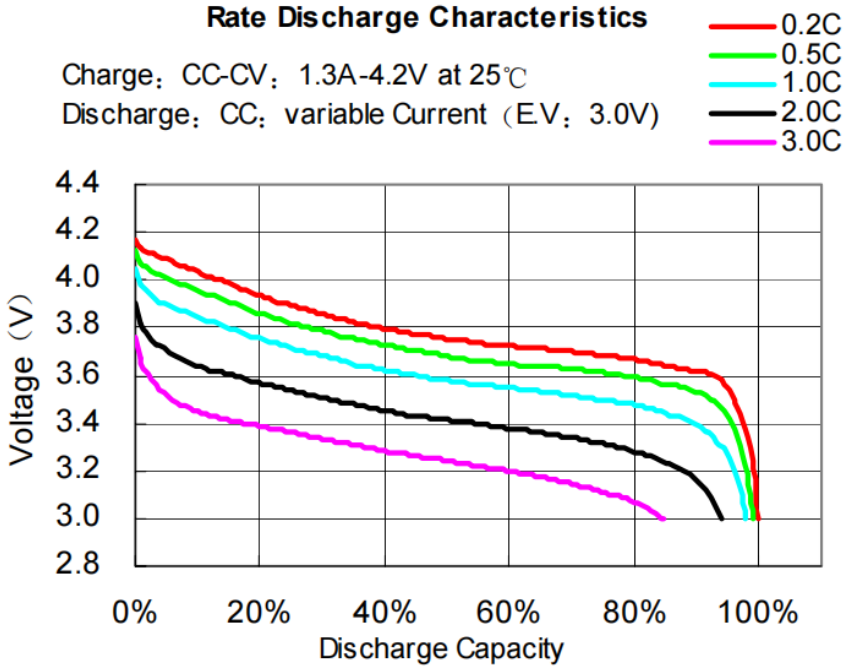

ANNOUNCEMENT

- Ensure that you choose a regular and reputable supplier before purchasing.
- The battery must be protected against shocks and splashing of materials from outside the model.
- Avoid storing the battery in a hot environment.
- Test equipment for short circuits prior to installing batteries.
- Only authorized personnel may ship lithium batteries. Contact EHRS if there is a need to ship batteries.
- Charging current should be less than maximum charge current specified in the Product Specification.
- Do not fully discharge your LiPo battery pack. Discharging a LiPo beyond it’s critical minimum voltage (often 3.0v) can cause damage to the battery.
- Avoid storing unused batteries for long periods of time, and perform regular battery maintenance and charging.
- Do not attempt to disassemble or repair the battery.
- Prevent arcing by turning the charger off before disconnecting the battery.
- Ensure that you purchase the right type and size of battery that matches the requirements of your equipment.