# 3.7V Lithium Polymer Battery Data Sheet

Model:  503039

Please Find More:

https://www.fpbattery.com/3-7v-500mah-lithium-polymer-battery/

File Number:  A/FP3039-8533

File Version: 01


CONTACT

CUSTOMER SERVICE
86.755.3682.7358
sales@fpbattery.com
Hours of Operation:
9:00am-6:00pm CST, Monday to Friday

LEARN MORE ON:
https://www.fpbattery.com/

DNK POWER COMPANY LIMITED

## BATTERY SPECIFICATION

| | |
|---|---|
| Part Number | DNK 503039 |
| Nominal Voltage | 3.7 V |
| Nominal Capacity | 585 mAh |
| Internal Impedence | <60mΩ |
| Charge Voltage | 4.2V |
| Recommended Charge Current | 0.2 C |
| Allowed Max Charge Current | 0.5 C |
| Output Voltage Range | 4.2 - 2.5 V |
| Recommended Discharge Current | 0.2 C |
| Max Continuous Discharge Current | 1 C |
| Pulse Discharge Current | 3 C (10 mS) |
| Discharge Cut-off Voltage | 2.5± 0.05V |
| Cycle Life to 80% Health | 500 (0.2C, 25°C) |

1

Inflex and soler

**1 YEAR WARRANTY**

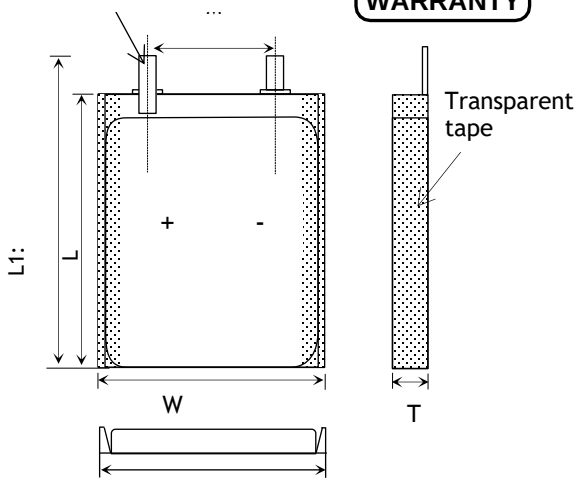


| Item | Parameter (mm) |
|---|---|
| T | 5 |
| W | 30 |
| M | 10 |
| L | 39 |
| $L_1$ | 41 |
| BL | 41 ± 1 |
| CL | 100 |

## ENVIRONMENTAL SPECIFICATIONS

| | |
|---|---|
| Charging Temperature Range | 0 - 45°C |
| Discharging Temperature Range | -20 - 60°C |
| Storage Period 1 Week | -20 - 45°C |
| Storage Period 1 Month | -10 - 45°C |
| Storage Period 6 Months | 0 - 35°C |

## BATTERY PROTECTION

| | |
|---|---|
| Over Charge | 4.275 ± 50mV |
| Over Discharge | 2.5V ± 50mV |
| Over Current | 3A to 5A |
| Short Circuit | Yes |

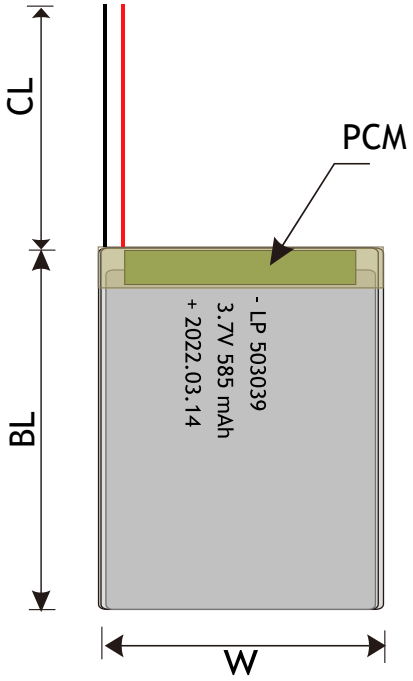


## MECHANICAL SPECIFICATIONS

| | |
|---|---|
| Dimensions | 41x 30 x 5 mm(L*W*T) |
| Weight | 9 g |
| Battery Terminals | WC/ FL * |

## CERTIFICATION

| | |
|---|---|
| Certification Approval | PLEASE CONSULT SALES |

* WC=With Connector FL=Flying Leads UWP=Blue Wrapped PVC BWP=Black Wrapped PVC BC= Bare Cell

# RELATIVE CURVES

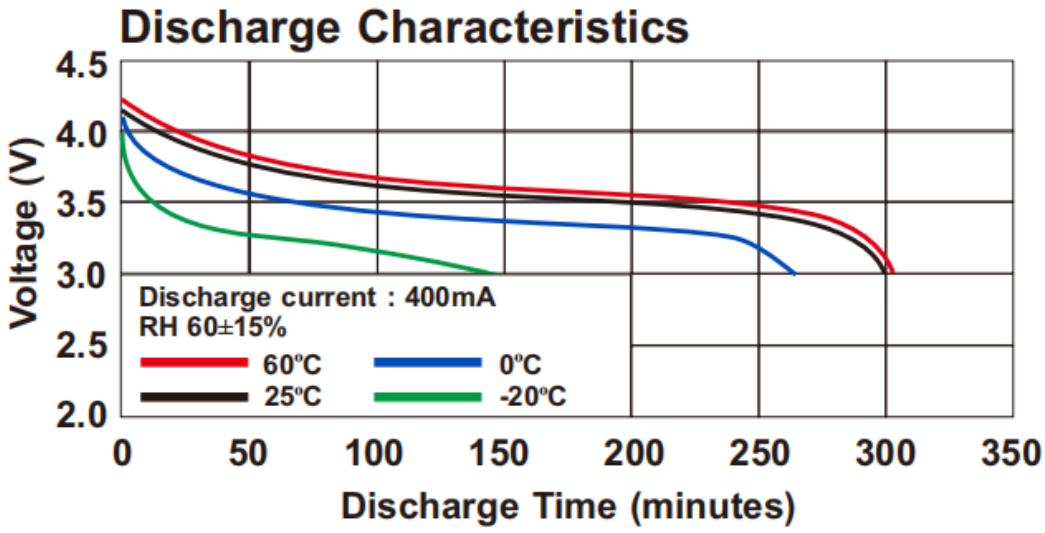


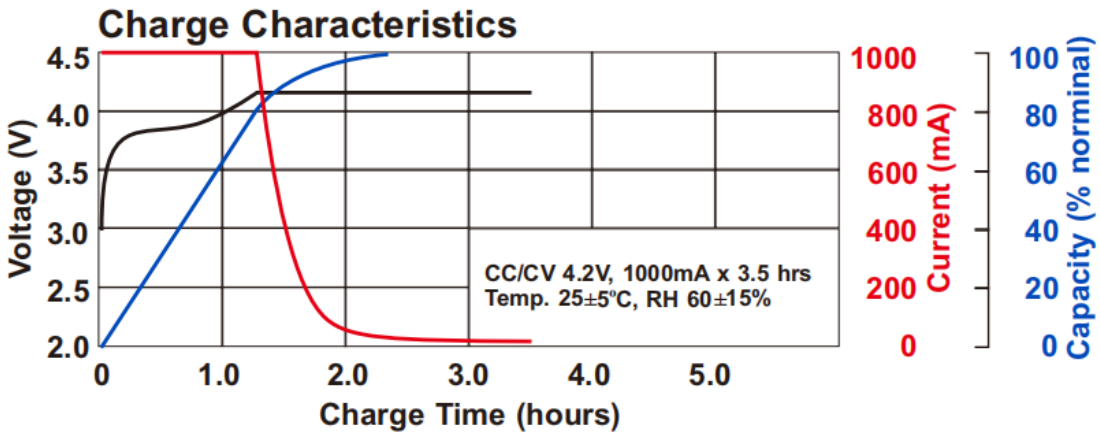


# ANNOUNCEMENT

- Do not expose the battery to temperature extremes, such as high or low temperatures.
- Never charge Batteries that are too hot to the touch (above 100° F). DO NOT handle Batteries until they are cool.
- Do not immerse the battery in water or expose it to moisture.
- If your skin or eyes come into contact with liquid from the battery, rinse thoroughly and notify a medical service for expert advice.
- Never charge a battery pack that has been punctured or damaged.
- LiPo batteries have very specific charging requirements. Some chargers, such as those used for toys or cellphones, are made to charge a specific cell count and are not configurable for other cell counts. The LiPo charger used must be able to handle the cell count of the battery you arecharging.
- NEVER alter or disassemble a Lipo battery.
- Use high quality battery connectors. Using connectors that do not fit tightly into the battery socket may result in overheating and melting of the battery case. Remove the connectors from the battery after EVERY use and during storage. Failure to do so will result in plug fatigue resulting in a bad connection and possible case melting. Replace connectors frequently to preserve good connections.
- Make sure the battery is fully charged before use.
- Observe the polarities (Negative and Positive). Do not connect them wrongly.
- Do not discharge a LiPo battery at a rate exceeding the maximum continuous discharge current specified for it. Otherwise, the battery will overheat and result in battery deterioration, bursting, ballooning, or possibly cause a fire or explosion.