3.7V Lithium Polymer Battery Data Sheet

Model: 502844

Please Find More:

https://www.fpbattery.com/3-7v-600mah-lithium-polymer-battery/

File Number: A/FP2844-13491

File Version: 01

CONTACT

CUSTOMER SERVICE
86.755.3682.7358
sales@fpbattery.com
Hours of Operation:
9:00am-6:00pm CST, Monday to Friday

LEARN MORE ON:
https://www.fpbattery.com/

DNK POWER COMPANY LIMITED

BATTERY SPECIFICATION

Part Number	DNK 502844
Nominal Voltage	3.7 V
Nominal Capacity	615 mAh
Internal Impedence	<60mΩ
Charge Voltage	4.2V
Recommended Charge Current	0.2 C
Allowed Max Charge Current	0.5 C
Output Voltage Range	4.2 - 2.5 V
Recommended Discharge Current	0.2 C
Max Continuous Discharge Current	1 C
Pulse Discharge Current	3 C (10 mS)
Discharge Cut-off Voltage	2.5± 0.05V
Cycle Life to 80% Health	500 (0.2C, 25°C)

1

1 YEAR WARRANTY

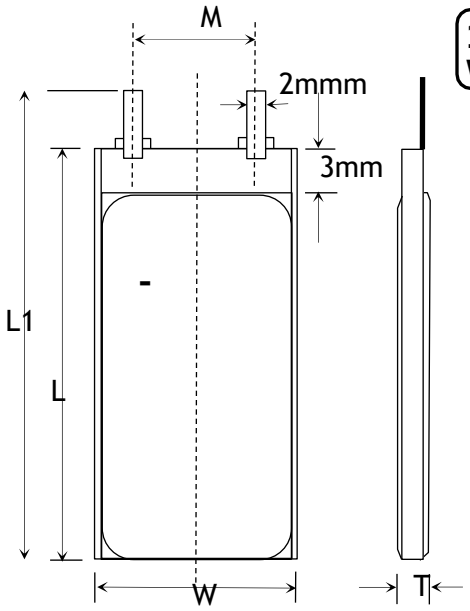

Item	Parameter (mm)
T	5
W	28
M	10
L	44
L_1	46
BL	46 ± 1
CL	100

ENVIRONMENTAL SPECIFICATIONS

Charging Temperature Range	0 - 45°C
Discharging Temperature Range	-20 - 60°C
Storage Period 1 Week	-20 - 45°C
Storage Period 1 Month	-10 - 45°C
Storage Period 6 Months	0 - 35°C

BATTERY PROTECTION

Over Charge	4.275 ± 50mV
Over Discharge	2.5V ± 50mV
Over Current	3A to 5A
Short Circuit	Yes

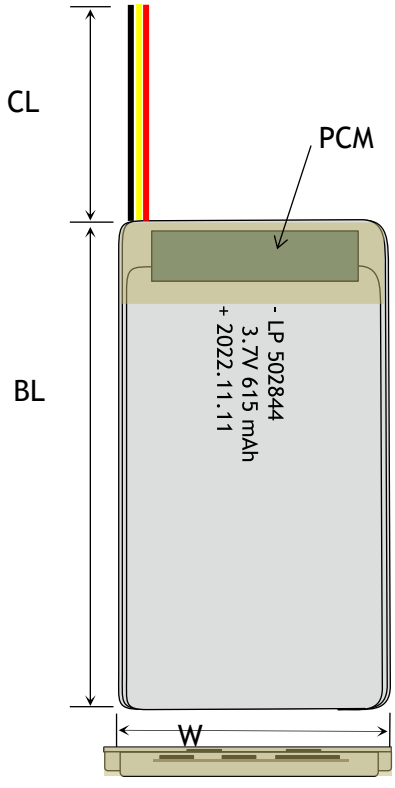

MECHANICAL SPECIFICATIONS

Dimensions	46x 28 x 5 mm(L*W*T)
Weight	Around 10 g
Battery Terminals	WC/ FL *

CERTIFICATION

Certification Approval	PLEASE CONSULT SALES

* WC=With Connector FL=Flying Leads UWP=Blue Wrapped PVC BWP=Black Wrapped PVC BC= Bare Cell

RELATIVE CURVES

Constant Current Charge Characteristics---1.7A

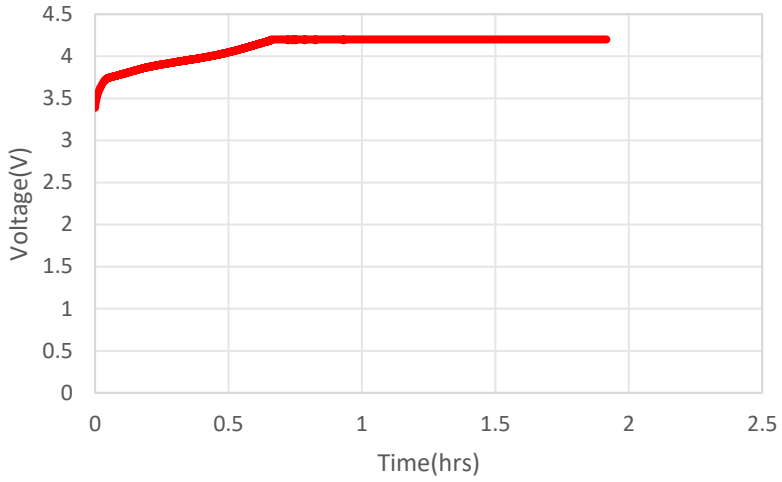

Discharge Characteristics

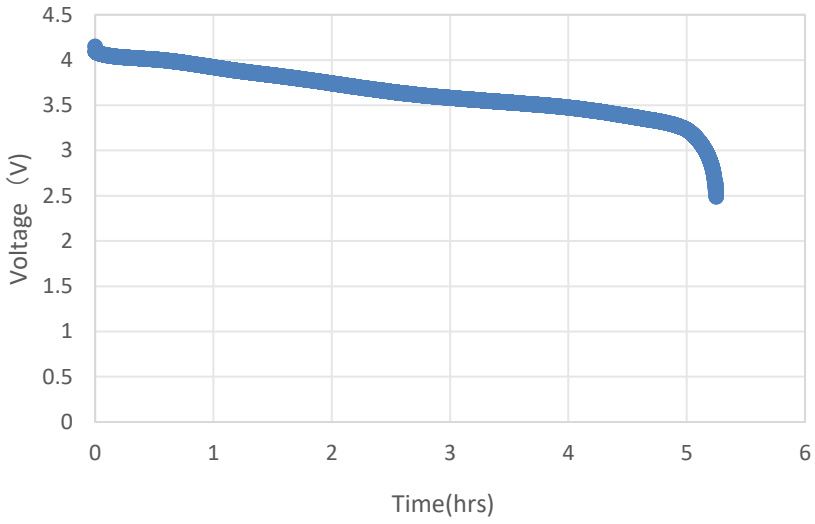

ANNOUNCEMENT

- Always charge/store Batteries in a non-conductive, fire-proof container or bag.
- Do not expose the battery to temperature extremes, such as high or low temperatures.
- Never charge a LiPo battery on a wooden or other combustible (carpeted) surface. Always charge LiPo batteries on surfaces made of cement, steel, ceramic or stone.
- Do not use water to extinguish a buttery fire Use a Class ABC dry fire extinguisher.
- Charging current should be less than maximum charge current specified in the Product Specification.
- Do not attempt to disassemble or repair the battery.
- Do not use a battery that has been over-discharged.
- Always use a balancer board to charge LiPo Battery with more than 1 cell.
- If any of the individual cells become warm/hot compared to the other cells, disconnect it immediately and either cover it with a fire blanket, or put it in a non-conductive container and place it outside away from all flammable objects for at least 30 minutes as chemical reactions can take this long before a fire starts.
- Avoid excessively hot and humid conditions, especially when batteries are fully charged. Do not place batteries in direct sunlight, on hot surfaces or in hot locations.
- When using the charger, please monitor the temperature of the charger.