3.7V Lithium Polymer Battery Data Sheet

Model: 502762

Please Find More:

https://www.fpbattery.com/3-7v-800mah-lithium-polymer-battery/

File Number: A/FP2762-21067

File Version: 01

CONTACT

CUSTOMER SERVICE
86.755.3682.7358
sales@fpbattery.com
Hours of Operation:
9:00am-6:00pm CST, Monday to Friday

LEARN MORE ON:
https://www.fpbattery.com/

DNK POWER COMPANY LIMITED

BATTERY SPECIFICATION

Part Number	DNK 502762
Nominal Voltage	3.7 V
Nominal Capacity	835 mAh
Internal Impedence	<60mΩ
Charge Voltage	4.2V
Recommended Charge Current	0.2 C
Allowed Max Charge Current	0.5 C
Output Voltage Range	4.2 - 2.5 V
Recommended Discharge Current	0.2 C
Max Continuous Discharge Current	1 C
Pulse Discharge Current	3 C (10 mS)
Discharge Cut-off Voltage	2.5± 0.05V
Cycle Life to 80% Health	500 (0.2C, 25°C)

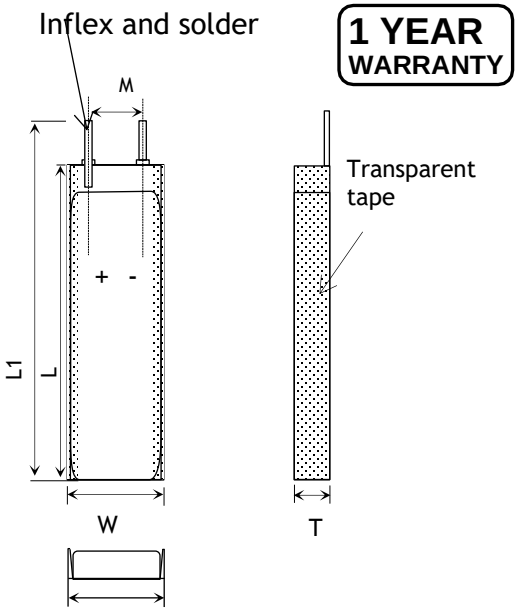

Item	Parameter (mm)
T	5
W	27
M	10
L	62
L_1	64
BL	64 ± 1
CL	100

ENVIRONMENTAL SPECIFICATIONS

Charging Temperature Range	0 - 45°C
Discharging Temperature Range	-20 - 60°C
Storage Period 1 Week	-20 - 45°C
Storage Period 1 Month	-10 - 45°C
Storage Period 6 Months	0 - 35°C

BATTERY PROTECTION

Over Charge	4.275 ± 50mV
Over Discharge	2.5V ± 50mV
Over Current	3A to 5A
Short Circuit	Yes

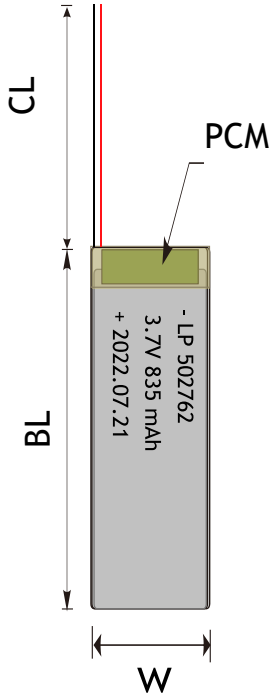

MECHANICAL SPECIFICATIONS

Dimensions	64x 27 x 5 mm(L*W*T)
Weight	13 g
Battery Terminals	WC/ FL *

CERTIFICATION

Certification Approval	PLEASE CONSULT SALES

* WC=With Connector FL=Flying Leads UWP=Blue Wrapped PVC BWP=Black Wrapped PVC BC= Bare Cell

BULK PRODUCTION ACTUAL PICTURES



BARE CELL (BC)



FLYING LEADS (FL)



WITH CONNECTOR (WC)



BLUE WRAPPED PVC (UWP)



BLACK WRAPPED PVC (BWP)

3.7V LIPO BATTERY OPTIONS



Special Ingredients to make batteries work from -40 -85 ° C



Discharging Current up to 100C



Popular JST,Molex,Hirose,Anderson available



LED Power Indicator



Power Button



Upgrade to LifePo4 tech and life circle up to 1500

RELATIVE CURVES

SOC Changing Characteriestics Curve in Different Rate @25℃
1C VS 0.2C

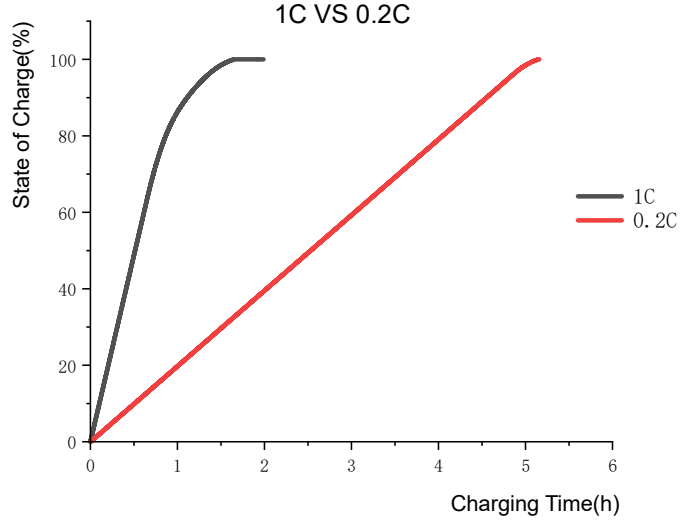

Discharge VS Charge Characteristics Curve@0.2C 25℃

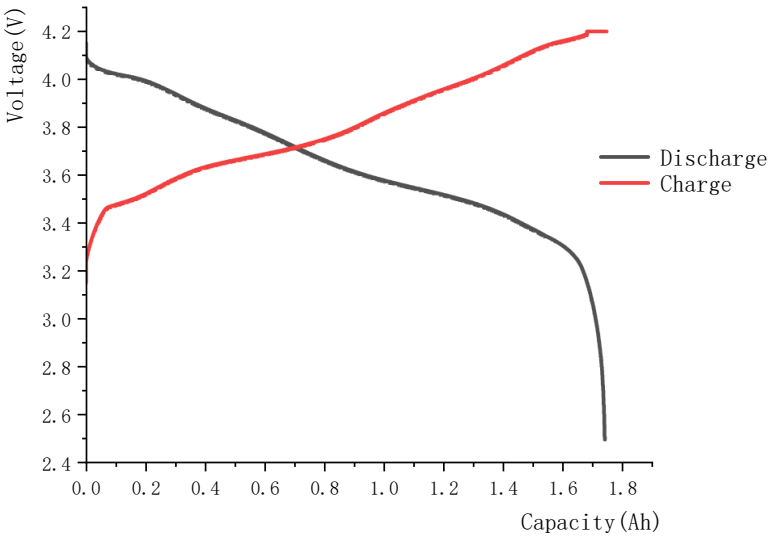

ANNOUNCEMENT

- Do not place the battery in a microwave or other heating device.
- Reacting and leaking batteries are considered hazardous waste. Please consult Emergency Procedures below.
- Discharging capacity can't exceed 80% of the max capacity after full charging to ensure a good cycle performance
- Avoid excessively hot and humid conditions, especially when batteries are fully charged. Do not place batteries in direct sunlight, on hot surfaces or in hot locations.
- Check and double check that you have set the correct voltage/number of cells and the maximum current does not exceed the stated charge rate (normally 1C). If using an automatic charger, check that it has detected the correct number of cells. Check it again through every stage of charging.
- Do not crush or bend the battery.
- Be aware that many of the more expensive LiPo chargers will automatically detect the cell count of the battery being charged; cheaper chargers will require a manual setting.
- Never directly connect the terminals with metal objects. This will short-circuit Batteries, resulting in heat and electrical discharge.
- Before starting work, inspect your battery for signs of damage prior to each use: bulging, hissing, leaking, or smoking. Do not use your battery if it displays any of these characteristics.
- Avoid passive or active short-circuiting of the battery.
- Do not store together with fire accelerating products