# 3.7V Lithium Polymer Battery Data Sheet

Model:  502445

Please Find More:

https://www.fpbattery.com/3-7v-500mah-lithium-polymer-battery/

File Number:  A/FP2445-17791

File Version: 01


CONTACT

CUSTOMER SERVICE
86.755.3682.7358
sales@fpbattery.com
Hours of Operation:
9:00am-6:00pm CST, Monday to Friday

LEARN MORE ON:
https://www.fpbattery.com/

DNK POWER COMPANY LIMITED

## BATTERY SPECIFICATION

| | |
|---|---|
| Part Number | DNK 502445 |
| Nominal Voltage | 3.7 V |
| Nominal Capacity | 540 mAh |
| Internal Impedence | <60mΩ |
| Charge Voltage | 4.2V |
| Recommended Charge Current | 0.2 C |
| Allowed Max Charge Current | 0.5 C |
| Output Voltage Range | 4.2 - 2.5 V |
| Recommended Discharge Current | 0.2 C |
| Max Continuous Discharge Current | 1 C |
| Pulse Discharge Current | 3 C (10 mS) |
| Discharge Cut-off Voltage | 2.5± 0.05V |
| Cycle Life to 80% Health | 500 (0.2C, 25°C) |

1

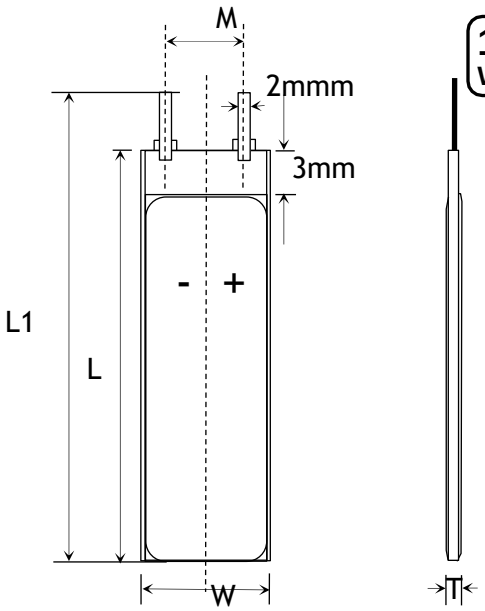


**1 YEAR WARRANTY**

| Item | Parameter (mm) |
|---|---|
| T | 5 |
| W | 24 |
| M | 10 |
| L | 45 |
| $L_1$ | 47 |
| BL | 47 ± 1 |
| CL | 100 |

## ENVIRONMENTAL SPECIFICATIONS

| | |
|---|---|
| Charging Temperature Range | 0 - 45°C |
| Discharging Temperature Range | -20 - 60°C |
| Storage Period 1 Week | -20 - 45°C |
| Storage Period 1 Month | -10 - 45°C |
| Storage Period 6 Months | 0 - 35°C |

## BATTERY PROTECTION

| | |
|---|---|
| Over Charge | 4.275 ± 50mV |
| Over Discharge | 2.5V ± 50mV |
| Over Current | 3A to 5A |
| Short Circuit | Yes |

## MECHANICAL SPECIFICATIONS

| | |
|---|---|
| Dimensions | 47x 24 x 5 mm(L*W*T) |
| Weight | Around 9 g |
| Battery Terminals | WC/ FL * |

## CERTIFICATION

| | |
|---|---|
| Certification Approval | PLEASE CONSULT SALES |

* WC=With Connector FL=Flying Leads UWP=Blue Wrapped PVC BWP=Black Wrapped PVC BC= Bare Cell

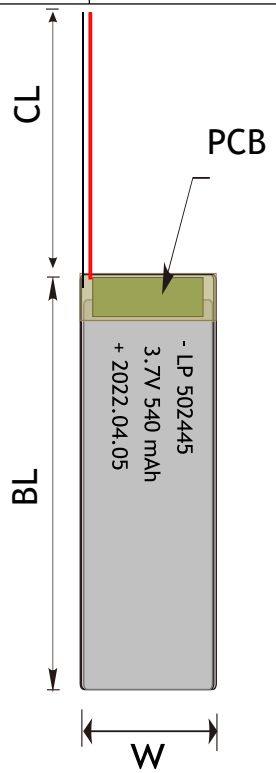

# RELATIVE CURVES

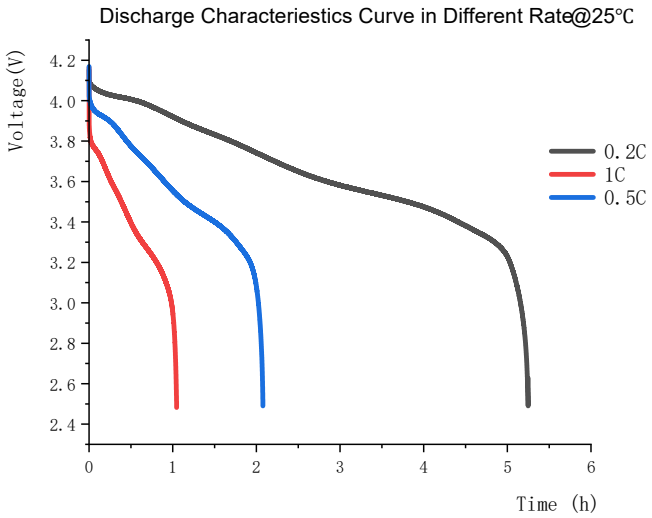


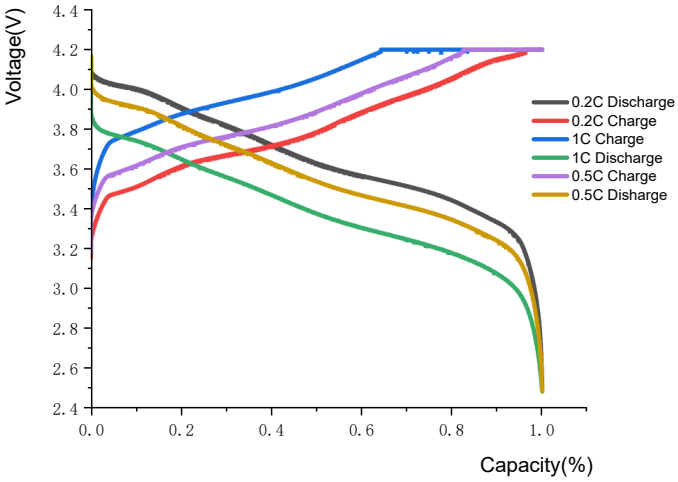


# ANNOUNCEMENT

- Store it in a fire-proof container in a cool dry place.
- Ensure that you purchase the right type and size of battery that matches the requirements of your equipment.
- NEVER put discarded batteries in piles.
- Do not use batteries with physical damage, such as dented, cracked or leaking batteries.
- Keep Lipo batteries away from heal! And direct sunlight, and do not Store ma car during hot weather. Never use a Lipo that is leaking or gives off a strong odor, or has been damaged many way.
- During transportation and storage, ensure effective measures are employed to prevent shortcircuit.
- ALWAYS locate exits and evacuation routes in your area. Know the location of portable fire extinguishers in the area, and the location of the nearest fire alarm pull station (if the building is equipped with a fire alarm system).
- Check and double check that you have set the correct voltage/number of cells and the maximum current does not exceed the stated charge rate (normally 1C). If using an automatic charger, check that it has detected the correct number of cells. Check it again through every stage of charging.
- Do not short the wires of your LiPo battery. This is very dangerous and can cause a fire or even an explosion. If you accidentally short the wires of your LiPo battery, either cover it with a fire blanket, or put it in a non-conductive fire-proof container and place it outside away from all flammable objects for at least 30 minutes as chemical reactions can take this long before a fire starts.
- During discharging and handling the batteries, do not exceed 160°F (71°C). Otherwise, the battery may be damaged and a fire may result.
- Do not attempt to disassemble or repair the battery.