# 3.7V Lithium Polymer Battery Data Sheet

Model:  455059

Please Find More:

https://www.fpbattery.com/3-7v-1300mah-lithium-polymer-battery/

File Number:  A/FP5059-5922

File Version: 01


CONTACT

CUSTOMER SERVICE
86.755.3682.7358
sales@fpbattery.com
Hours of Operation:
9:00am-6:00pm CST, Monday to Friday

LEARN MORE ON:
https://www.fpbattery.com/

DNK POWER COMPANY LIMITED

## BATTERY SPECIFICATION

| | |
|---|---|
| Part Number | DNK 455059 |
| Nominal Voltage | 3.7 V |
| Nominal Capacity | 1300 mAh |
| Internal Impedence | <60mΩ |
| Charge Voltage | 4.2V |
| Recommended Charge Current | 0.2 C |
| Allowed Max Charge Current | 0.5 C |
| Output Voltage Range | 4.2 - 2.5 V |
| Recommended Discharge Current | 0.2 C |
| Max Continuous Discharge Current | 1 C |
| Pulse Discharge Current | 3 C (10 mS) |
| Discharge Cut-off Voltage | 2.5± 0.05V |
| Cycle Life to 80% Health | 500 (0.2C, 25°C) |

1

**1 YEAR WARRANTY**

Inflex and soler

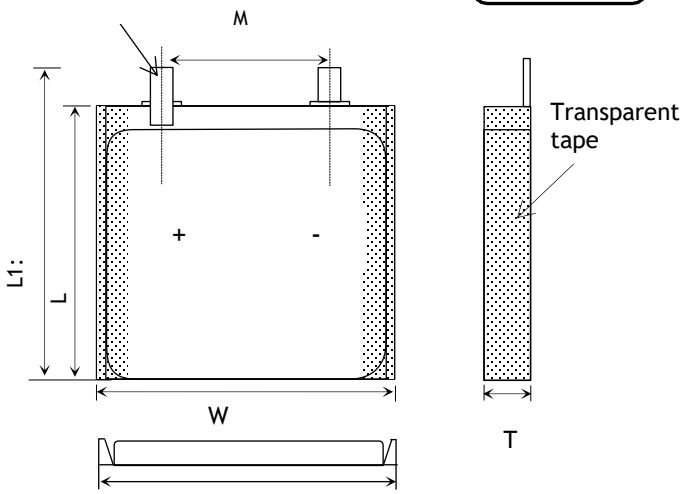


| Item | Parameter (mm) |
|---|---|
| T | 4 |
| W | 50 |
| M | 10 |
| L | 59 |
| $L_1$ | 61 |
| BL | 61 ± 1 |
| CL | 100 |

## ENVIRONMENTAL SPECIFICATIONS

| | |
|---|---|
| Charging Temperature Range | 0 - 45°C |
| Discharging Temperature Range | -20 - 60°C |
| Storage Period 1 Week | -20 - 45°C |
| Storage Period 1 Month | -10 - 45°C |
| Storage Period 6 Months | 0 - 35°C |

## BATTERY PROTECTION

| | |
|---|---|
| Over Charge | 4.275 ± 50mV |
| Over Discharge | 2.5V ± 50mV |
| Over Current | 3A to 5A |
| Short Circuit | Yes |

## MECHANICAL SPECIFICATIONS

| | |
|---|---|
| Dimensions | 61x 50 x 4 mm(L*W*T) |
| Weight | Around 21 g |
| Battery Terminals | WC/ FL * |

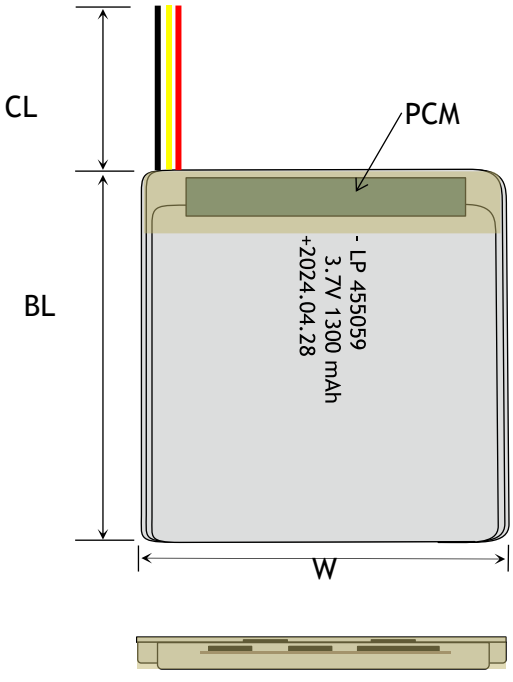


## CERTIFICATION

| | |
|---|---|
| Certification Approval | PLEASE CONSULT SALES |

* aWC=With Connector FL=Flying Leads UWP=Blue Wrapped PVC
BWP=Black Wrapped PVC BC= Bare Cell

## BULK PRODUCTION ACTUAL PICTURES



BARE CELL (BC)




FLYING LEADS (FL)




WITH CONNECTOR (WC)



BLUE WRAPPED PVC (UWP)



BLACK WRAPPED PVC (BWP)

## 3.7V LIPO BATTERY OPTIONS



Special Ingredients to make batteries work from -40 -85 ° C



Discharging Current up to 100C



Popular JST,Molex,Hirose,Anderson available



LED Power Indicator



Power Button



Upgrade to LifePo4 tech and life circle up to 1500

# RELATIVE CURVES

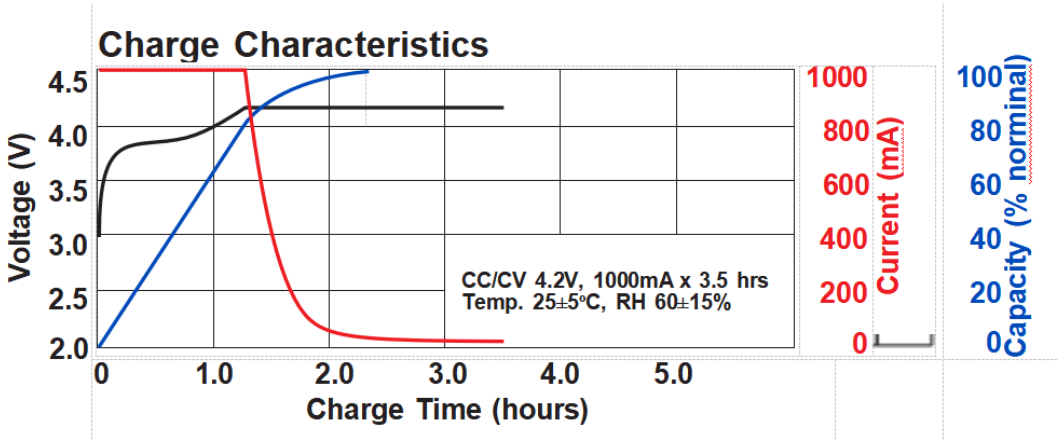


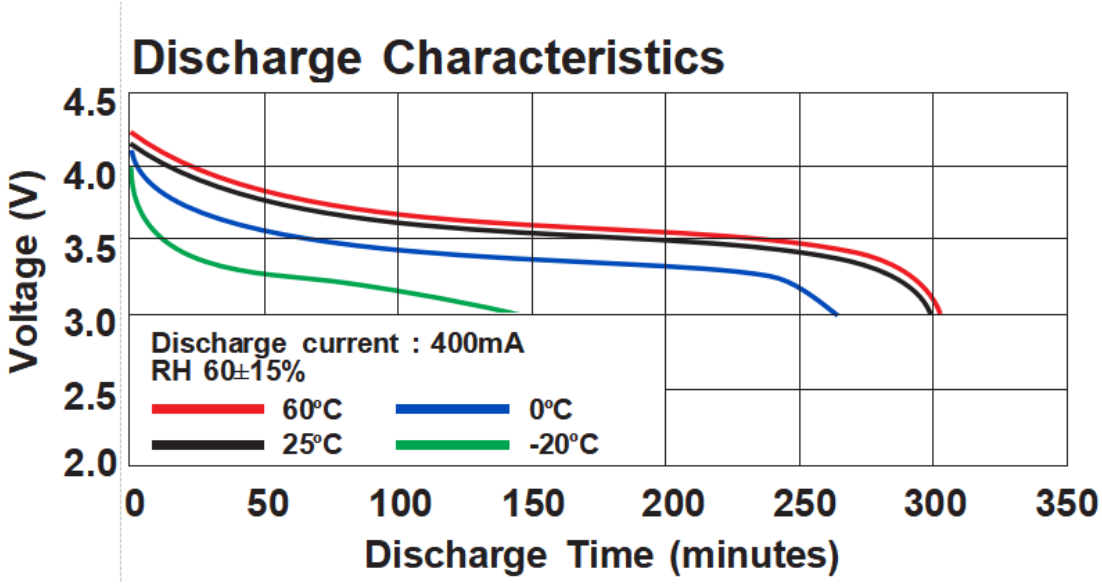


# ANNOUNCEMENT

- Never leave a charging LiPo battery pack unattended. Never store batteries inside of an automobile.
- Always use a balancer board to charge LiPo Battery with more than 1 cell.
- Reacting and leaking batteries are considered hazardous waste. Please consult Emergency Procedures below.
- Do not charge the battery without supervision.
- Set up dedicated charging area. Area must be free of combustible materials. Maintain space between charging batteries.
- A 1s or 1 cell LiPo battery has a nominal voltage of 3.7V. When fully charged it has a maximum voltage of 4.2V. When fully discharged, it should never go below 3.0V without risking cell damage.
- Do not place the battery in a microwave or other heating device.
- It is essential to observe the polarity. Reverse polarity (POSITIVE and NEGATIVE) will damage the cells, cause the battery to swell and can damage your charger.
- Never discharge Batteries at amperage rates higher than specified on Batteries' labels
- Always check the voltage of Batteries before each charge session in order to ensure they are at or above the minimum safe starting voltage. If starting voltage is below recommended levels than Batteries have been over discharged or have experienced a failure and should NOT be charged
- Only ever use a charger specifically designed to charge Lithium Polymer cells. Failure to do so may a cause fire, which may result in personal injury and/or property damage.