# 3.7V Lithium Polymer Battery Data Sheet

Model:  454866

Please Find More:

https://www.fpbattery.com/3-7v-1400mah-lithium-polymer-battery/

File Number:  A/FP4866-10026

File Version: 01


CONTACT

CUSTOMER SERVICE
86.755.3682.7358
sales@fpbattery.com
Hours of Operation:
9:00am-6:00pm CST, Monday to Friday

LEARN MORE ON:
https://www.fpbattery.com/

DNK POWER COMPANY LIMITED

## BATTERY SPECIFICATION

| | |
|---|---|
| Part Number | DNK 454866 |
| Nominal Voltage | 3.7 V |
| Nominal Capacity | 1400 mAh |
| Internal Impedence | <60mΩ |
| Charge Voltage | 4.2V |
| Recommended Charge Current | 0.2 C |
| Allowed Max Charge Current | 0.5 C |
| Output Voltage Range | 4.2 - 2.5 V |
| Recommended Discharge Current | 0.2 C |
| Max Continuous Discharge Current | 1 C |
| Pulse Discharge Current | 3 C (10 mS) |
| Discharge Cut-off Voltage | 2.5± 0.05V |
| Cycle Life to 80% Health | 500 (0.2C, 25°C) |

1

## ENVIRONMENTAL SPECIFICATIONS

| | |
|---|---|
| Charging Temperature Range | 0 - 45°C |
| Discharging Temperature Range | -20 - 60°C |
| Storage Period 1 Week | -20 - 45°C |
| Storage Period 1 Month | -10 - 45°C |
| Storage Period 6 Months | 0 - 35°C |

## BATTERY PROTECTION

| | |
|---|---|
| Over Charge | 4.275 ± 50mV |
| Over Discharge | 2.5V ± 50mV |
| Over Current | 3A to 5A |
| Short Circuit | Yes |

## MECHANICAL SPECIFICATIONS

| | |
|---|---|
| Dimensions | 68x 48 x 4 mm(L*W*T) |
| Weight | Around 23 g |
| Battery Terminals | WC/ FL * |

## CERTIFICATION

| | |
|---|---|
| Certification Approval | PLEASE CONSULT SALES |

* WC=With Connector FL=Flying Leads UWP=Blue Wrapped PVC BWP=Black Wrapped PVC BC= Bare Cell

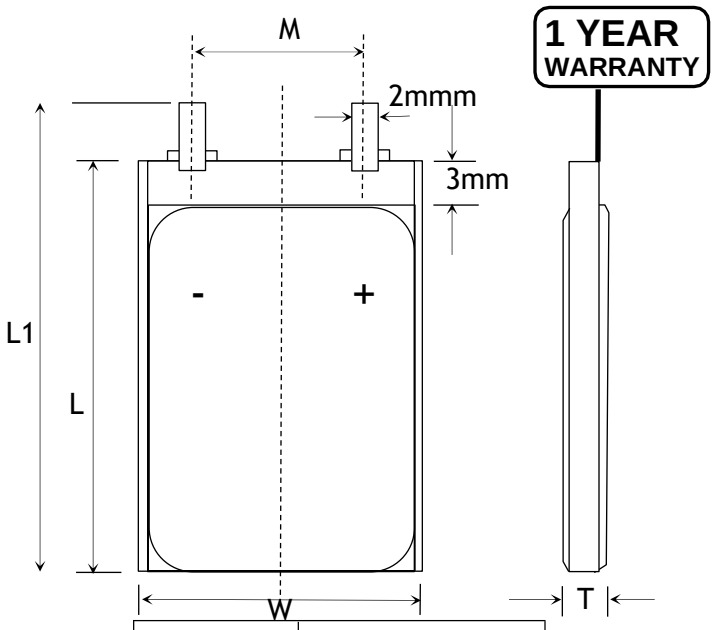


| Item | Parameter (mm) |
|---|---|
| T | 4 |
| W | 48 |
| M | 10 |
| L | 66 |
| $L_1$ | 68 |
| BL | 68 ± 1 |
| CL | 100 |

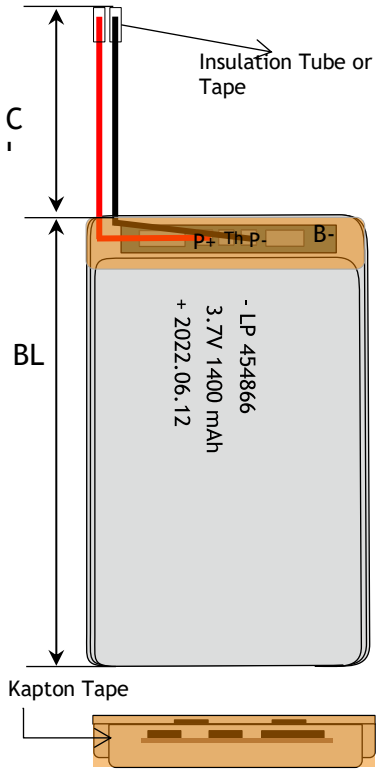

# RELATIVE CURVES

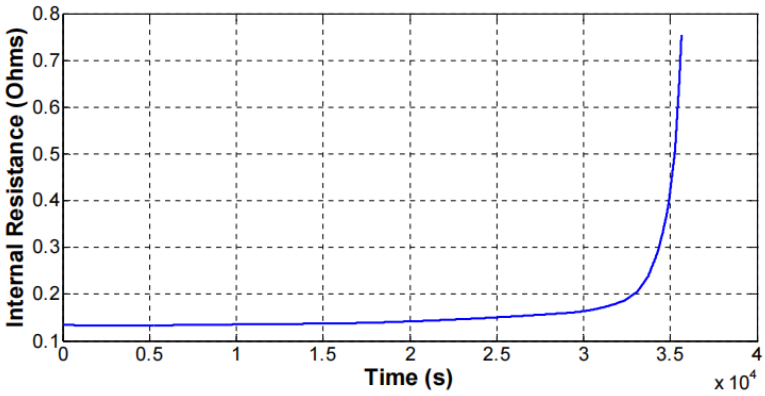


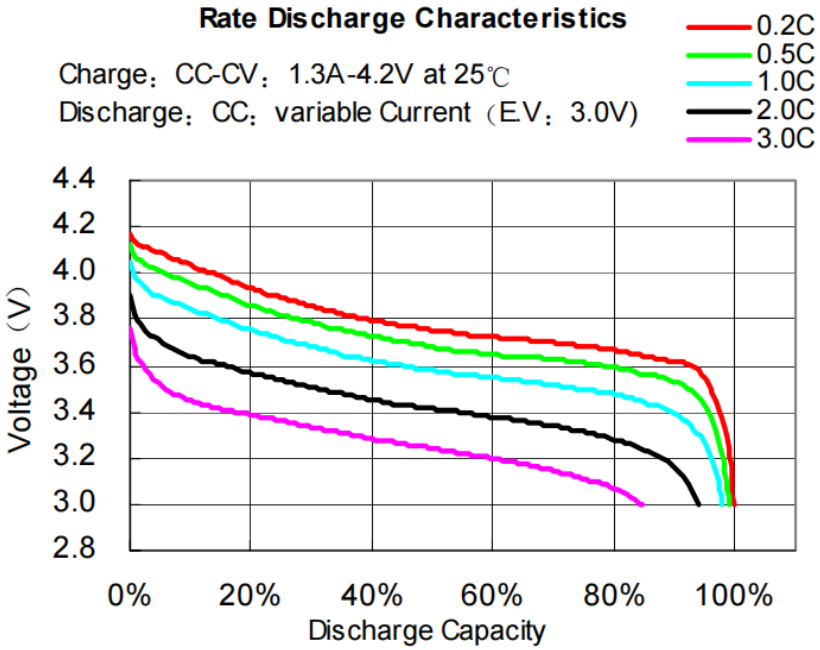


# ANNOUNCEMENT

- Do not leave unattended when charging
- Do not submit to static electricity risks tAVOID damages to the Protecting Circuit Board.
- If taking lithium batteries on an aircraft, follow FAA and IATA rules.
- Avoid restarting the device frequently on the way to using the battery.
- Avoid using charging methods other than wireless chargers.
- Keep all batteries out of the reach of children.
- Never leave batteries unattended where they can be damaged by someone.
- Do not store LiPo batteries in extreme temperatures below 0C or above 50C.
- ALWAYS close the door to the room or space.
- Do not short the wires of your LiPo battery. This is very dangerous and can cause a fire or even an explosion. If you accidentally short the wires of your LiPo battery, either cover it with a fire blanket, or put it in a non-conductive fire-proof container and place it outside away from all flammable objects for at least 30 minutes as chemical reactions can take this long before a fire starts.
- Observe the polarities (Negative and Positive). Do not connect them wrongly.