3.7V Lithium Polymer Battery Data Sheet

Model: 454764

Please Find More:

https://www.fpbattery.com/3-7v-1400mah-lithium-polymer-battery/

File Number: A/FP4764-9764

File Version: 01

CONTACT

CUSTOMER SERVICE
86.755.3682.7358
sales@fpbattery.com
Hours of Operation:
9:00am-6:00pm CST, Monday to Friday

LEARN MORE ON:
https://www.fpbattery.com/

DNK POWER COMPANY LIMITED

BATTERY SPECIFICATION

Part Number	DNK 454764
Nominal Voltage	3.7 V
Nominal Capacity	1400 mAh
Internal Impedence	<60mΩ
Charge Voltage	4.2V
Recommended Charge Current	0.2 C
Allowed Max Charge Current	0.5 C
Output Voltage Range	4.2 - 2.5 V
Recommended Discharge Current	0.2 C
Max Continuous Discharge Current	1 C
Pulse Discharge Current	3 C (10 mS)
Discharge Cut-off Voltage	2.5± 0.05V
Cycle Life to 80% Health	500 (0.2C, 25°C)

1

ENVIRONMENTAL SPECIFICATIONS

Charging Temperature Range	0 - 45°C
Discharging Temperature Range	-20 - 60°C
Storage Period 1 Week	-20 - 45°C
Storage Period 1 Month	-10 - 45°C
Storage Period 6 Months	0 - 35°C

BATTERY PROTECTION

Over Charge	4.275 ± 50mV
Over Discharge	2.5V ± 50mV
Over Current	3A to 5A
Short Circuit	Yes

MECHANICAL SPECIFICATIONS

Dimensions	66x 47 x 4 mm(L*W*T)
Weight	Around 23 g
Battery Terminals	WC/ FL *

CERTIFICATION

Certification Approval	PLEASE CONSULT SALES

* WC=With Connector FL=Flying Leads UWP=Blue Wrapped PVC BWP=Black Wrapped PVC BC= Bare Cell

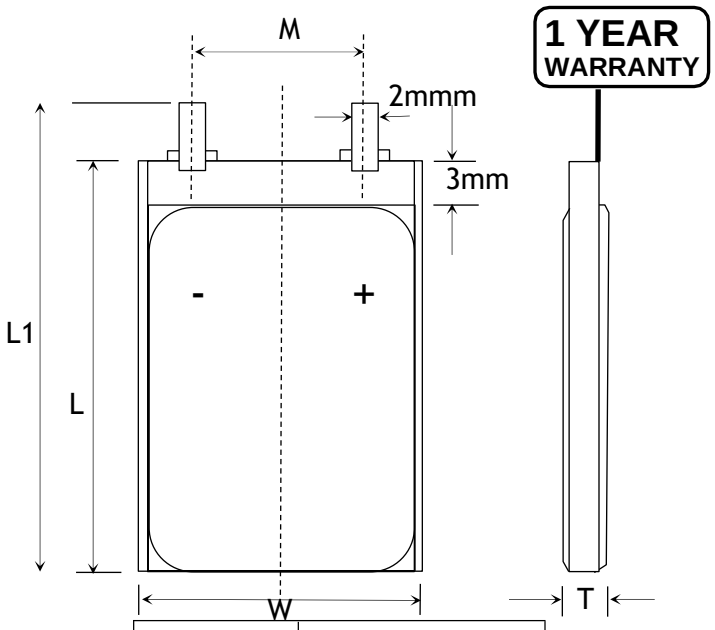

Item	Parameter (mm)
T	4
W	47
M	10
L	64
L_1	66
BL	66 ± 1
CL	100

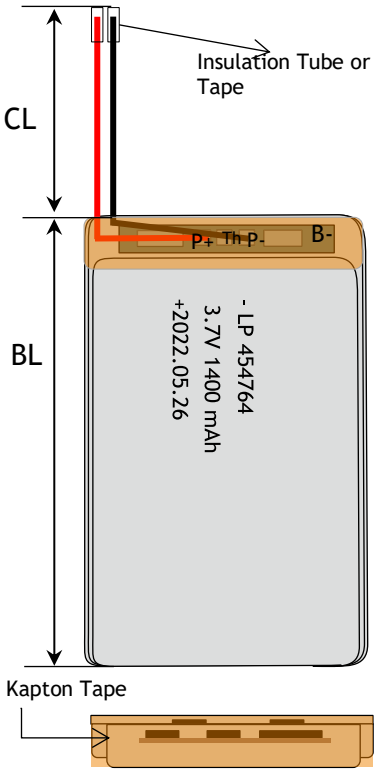

BULK PRODUCTION ACTUAL PICTURES



BARE CELL (BC)



FLYING LEADS (FL)



WITH CONNECTOR (WC)



BLUE WRAPPED PVC (UWP)



BLACK WRAPPED PVC (BWP)

3.7V LIPO BATTERY OPTIONS

Special Ingredients to make batteries work from -40 -85 ° C

Discharging Current up to 100C

Popular JST,Molex,Hirose,Anderson available





LED Power Indicator



Power Button

RELATIVE CURVES

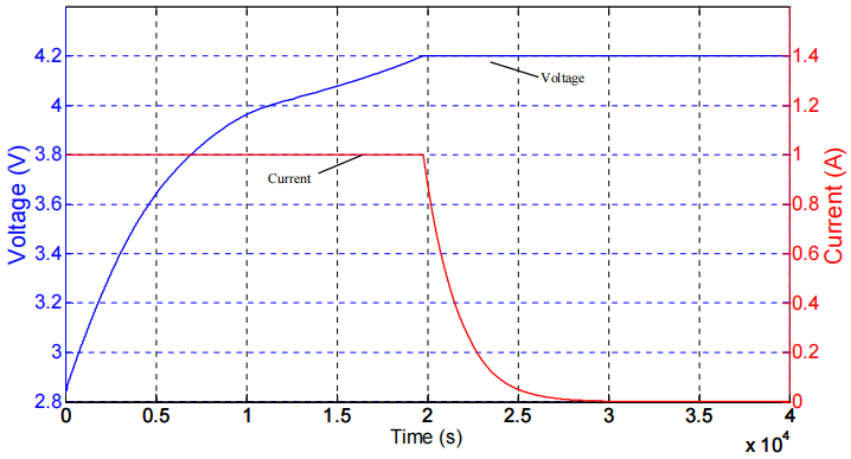

Discharge Temperature Characteristics

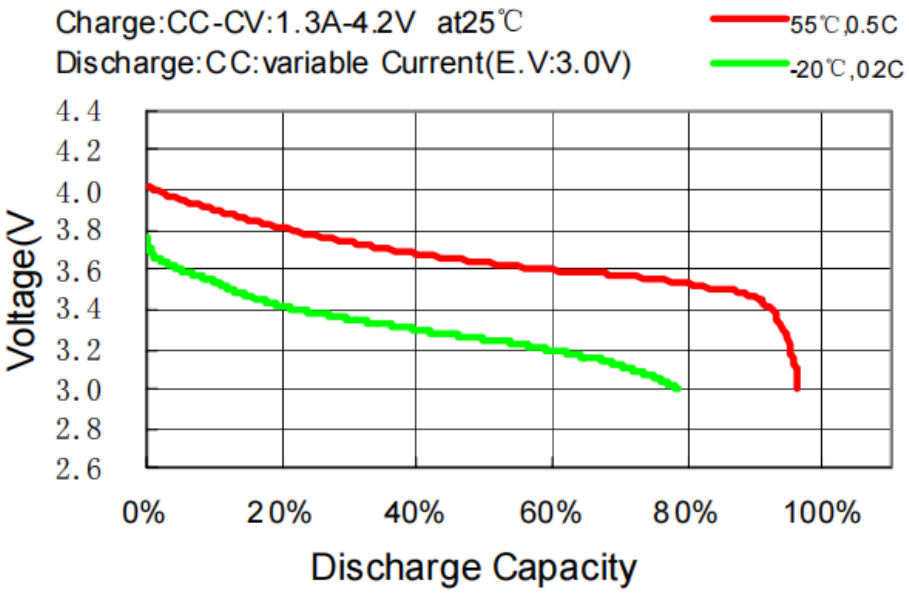

ANNOUNCEMENT

- Never charge a battery pack that has been punctured or damaged.
- Avoid passive or active short-circuiting of the battery.
- Always charge the LiPo battery outdoors or in a ventilated area away from flammable objects and surfaces.
- Avoid dropping batteries, dropping Lipos can cause the battery cell to crush causing an internal short which may lead to fire.
- Before starting work, if you are designing wearables using lithium-ion batteries, make sure they are easily removeable if they start to react while being worn.
- Never store or charge the battery inside your car or in extreme temperatures. Extreme temperatures might ignite the battery and cause fire. 7) Store the battery in a location inaccessible to children. Be sure that children do not remove the battery from the charger or model.
- Ensure that charging leads are connected correctly. Reverse charging can lead to cell damage, fire or explosion.
- NEVER continue to charge a device or a battery after it is fully charged, unless the manufacturer’s instructions for the charger and the battery specifically state that it is allowed.
- A LiPo Sack or metal/ceramic storage container is safest. Always store your LiPo’s partially charged so they maintain their performance levels overtime; there is no need to cycle them unless When storing batteries for extended periods, store at a half charged state. stored for periods longer than 36 months.

- The battery must be installed in the model on a flat surface.
- Discharge Lipo Battery at Environmental temperature : -20°C~60°C.