3.7V Lithium Polymer Battery Data Sheet

Model: 454753

Please Find More:

https://www.fpbattery.com/3-7v-1100mah-lithium-polymer-battery/

File Number: A/FP4753-4798

File Version: 01

CONTACT

CUSTOMER SERVICE
86.755.3682.7358
sales@fpbattery.com
Hours of Operation:
9:00am-6:00pm CST, Monday to Friday

LEARN MORE ON:
https://www.fpbattery.com/

DNK POWER COMPANY LIMITED

BATTERY SPECIFICATION

Part Number	DNK 454753
Nominal Voltage	3.7 V
Nominal Capacity	1100 mAh
Internal Impedence	<60mΩ
Charge Voltage	4.2V
Recommended Charge Current	0.2 C
Allowed Max Charge Current	0.5 C
Output Voltage Range	4.2 - 2.5 V
Recommended Discharge Current	0.2 C
Max Continuous Discharge Current	1 C
Pulse Discharge Current	3 C (10 mS)
Discharge Cut-off Voltage	2.5± 0.05V
Cycle Life to 80% Health	500 (0.2C, 25°C)

1

1 YEAR WARRANTY

Inflex and soler

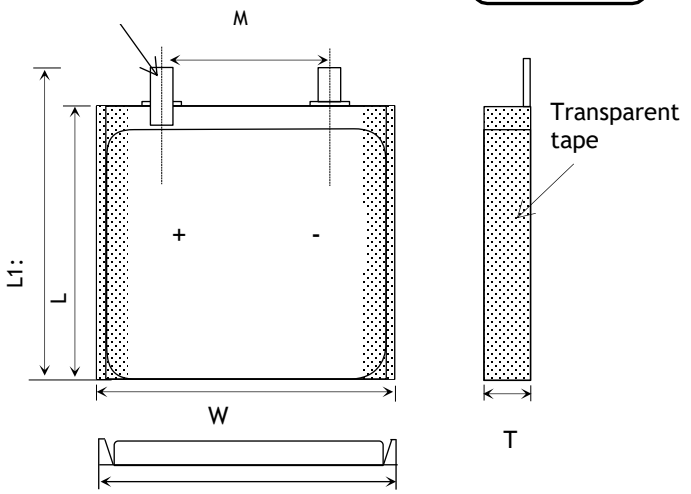

Item	Parameter (mm)
T	4
W	47
M	10
L	53
L_1	55
BL	55 ± 1
CL	100

ENVIRONMENTAL SPECIFICATIONS

Charging Temperature Range	0 - 45°C
Discharging Temperature Range	-20 - 60°C
Storage Period 1 Week	-20 - 45°C
Storage Period 1 Month	-10 - 45°C
Storage Period 6 Months	0 - 35°C

BATTERY PROTECTION

Over Charge	4.275 ± 50mV
Over Discharge	2.5V ± 50mV
Over Current	3A to 5A
Short Circuit	Yes

MECHANICAL SPECIFICATIONS

Dimensions	55x 47 x 4 mm(L*W*T)
Weight	Around 18 g
Battery Terminals	WC/ FL *

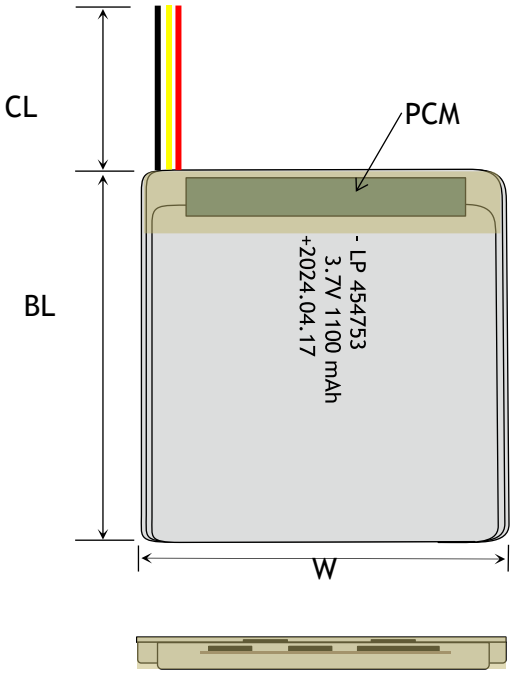

CERTIFICATION

Certification Approval	PLEASE CONSULT SALES

* aWC=With Connector FL=Flying Leads UWP=Blue Wrapped PVC
BWP=Black Wrapped PVC BC= Bare Cell

BULK PRODUCTION ACTUAL PICTURES



BARE CELL (BC)



FLYING LEADS (FL)



WITH CONNECTOR (WC)



BLUE WRAPPED PVC (UWP)



BLACK WRAPPED PVC (BWP)

3.7V LIPO BATTERY OPTIONS



Special Ingredients to make batteries work from -40 -85 ° C



Discharging Current up to 100C



Popular JST,Molex,Hirose,Anderson available



LED Power Indicator



Power Button



Upgrade to LifePo4 tech and life circle up to 1500

RELATIVE CURVES

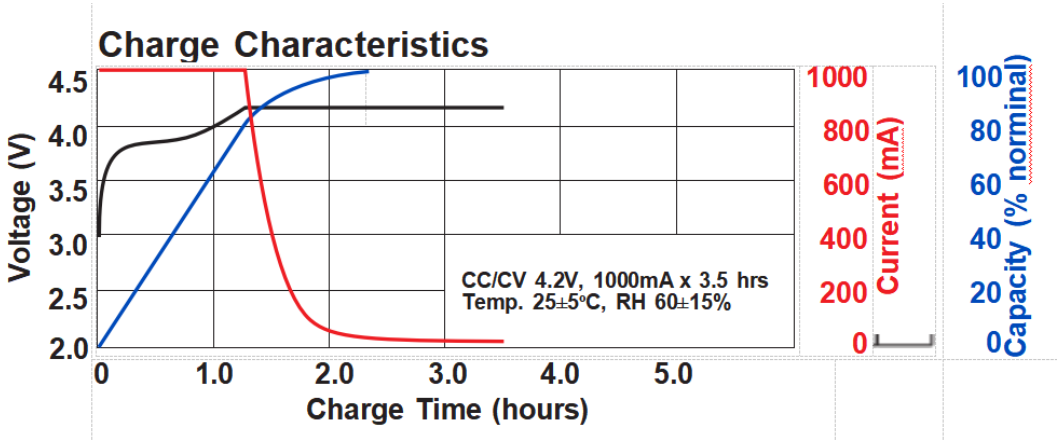

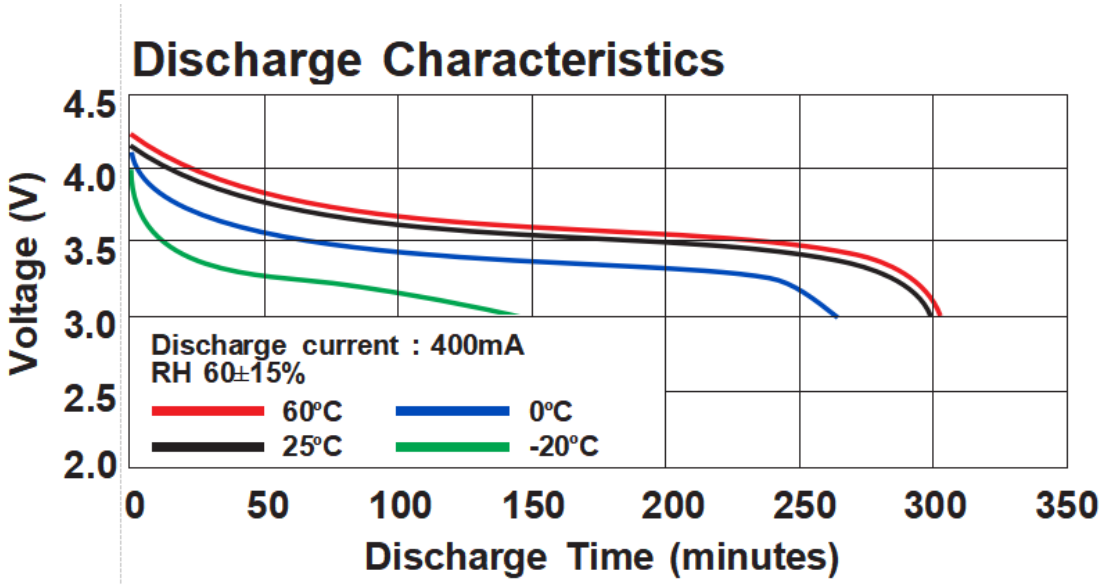

ANNOUNCEMENT

- The cells shall never be soaked with liquids such as water, seawater drinks such as soft drinks, juices coffee or others.
- Stop using or charging the battery immediately if the battery becomes or appears damaged, gives off an odor, becomes discolored or deformed, starts to balloon or swell, leaks, exceeds a temperature of 160°F (71°C), or if any other abnormality is detected. Disconnect the battery and observe it in a safe area outside of any building or vehicle and away from any combustible materials. These abnormalities may cause the battery to leak, and the reaction with air may cause the chemical materials inside to ignite. Because delayed chemical reactions may occur (a battery can still ignite even after 10 minutes), you should continue observing the battery for at least 15 minutes as a safety precaution.
- Use a reliable power adapter to avoid unstable current output.
- Before starting work, if applicable, understand one-hand working techniques.
- Never charge Batteries that are too hot to the touch (above 100° F). DO NOT handle Batteries until they are cool.
- When using the charger, please monitor the temperature of the charger.
- ALWAYS store batteries and devices at room temperature.
- Do not store your cells in a hot place (i.e. in your car on a hot day) as this may cause them to catch fire or even explode.
- Security or other responsible staff on site who may be called to take action in an emergency should be made aware of the location of the charging area, the means for isolating the power and the action to take in an emergency.
- Avoid tightening the voltage adjustment knob on the way to use the battery.
- A 5s4p battery pack means that the pack contains 5 cells in a series circuit and 4 cells in a parallel circuit. Since each cell is 3.7v (nominal) a 5s LiPo

battery has a nominal voltage of 18.5V, a fully charged voltage of 21.0V and a maximum discharged voltage of 15.0V before damage occurs.