3.7V Lithium Polymer Battery Data Sheet

Model: 454653

Please Find More:

https://www.fpbattery.com/3-7v-1100mah-lithium-polymer-battery/

File Number: A/FP4653-5388

File Version: 01

CONTACT

CUSTOMER SERVICE
86.755.3682.7358
sales@fpbattery.com
Hours of Operation:
9:00am-6:00pm CST, Monday to Friday

LEARN MORE ON:
https://www.fpbattery.com/

DNK POWER COMPANY LIMITED

BATTERY SPECIFICATION

Part Number	DNK 454653
Nominal Voltage	3.7 V
Nominal Capacity	1100 mAh
Internal Impedence	<60mΩ
Charge Voltage	4.2V
Recommended Charge Current	0.2 C
Allowed Max Charge Current	0.5 C
Output Voltage Range	4.2 - 2.5 V
Recommended Discharge Current	0.2 C
Max Continuous Discharge Current	1 C
Pulse Discharge Current	3 C (10 mS)
Discharge Cut-off Voltage	2.5± 0.05V
Cycle Life to 80% Health	500 (0.2C, 25°C)

1

1 YEAR WARRANTY

Inflex and soler

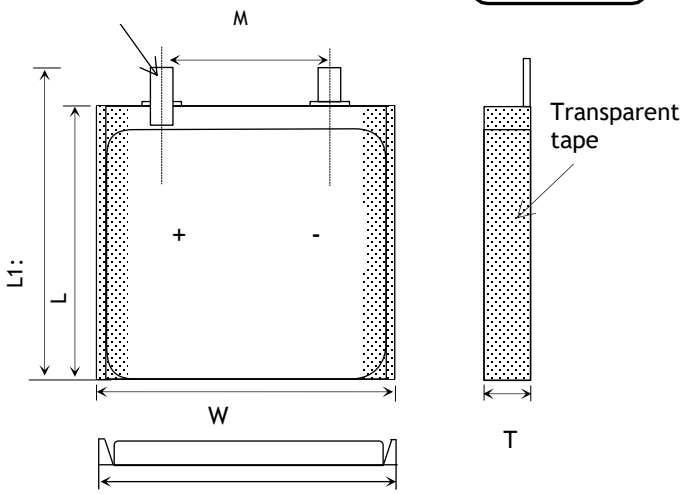

Item	Parameter (mm)
T	4
W	46
M	10
L	53
L_1	55
BL	55 ± 1
CL	100

ENVIRONMENTAL SPECIFICATIONS

Charging Temperature Range	0 - 45°C
Discharging Temperature Range	-20 - 60°C
Storage Period 1 Week	-20 - 45°C
Storage Period 1 Month	-10 - 45°C
Storage Period 6 Months	0 - 35°C

BATTERY PROTECTION

Over Charge	4.275 ± 50mV
Over Discharge	2.5V ± 50mV
Over Current	3A to 5A
Short Circuit	Yes

MECHANICAL SPECIFICATIONS

Dimensions	55x 46 x 4 mm(L*W*T)
Weight	Around 18 g
Battery Terminals	WC/ FL *

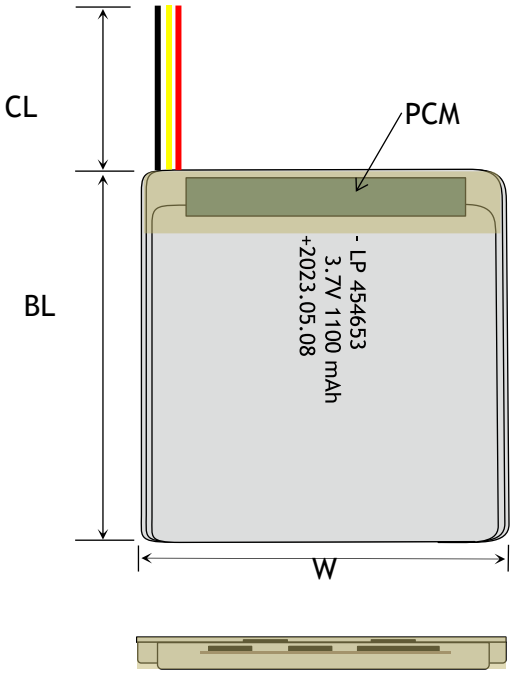

CERTIFICATION

Certification Approval	PLEASE CONSULT SALES

* aWC=With Connector FL=Flying Leads UWP=Blue Wrapped PVC
BWP=Black Wrapped PVC BC= Bare Cell

BULK PRODUCTION ACTUAL PICTURES



BARE CELL (BC)



FLYING LEADS (FL)



WITH CONNECTOR (WC)



BLUE WRAPPED PVC (UWP)



BLACK WRAPPED PVC (BWP)

3.7V LIPO BATTERY OPTIONS



Special Ingredients to make batteries work from -40 -85 ° C



Discharging Current up to 100C



Popular JST,Molex,Hirose,Anderson available



LED Power Indicator



Power Button



Upgrade to LifePo4 tech and life circle up to 1500

RELATIVE CURVES

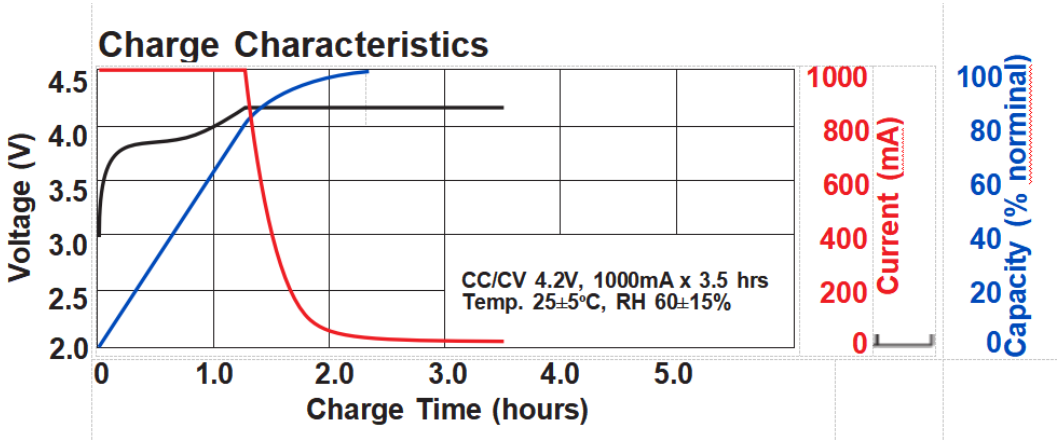

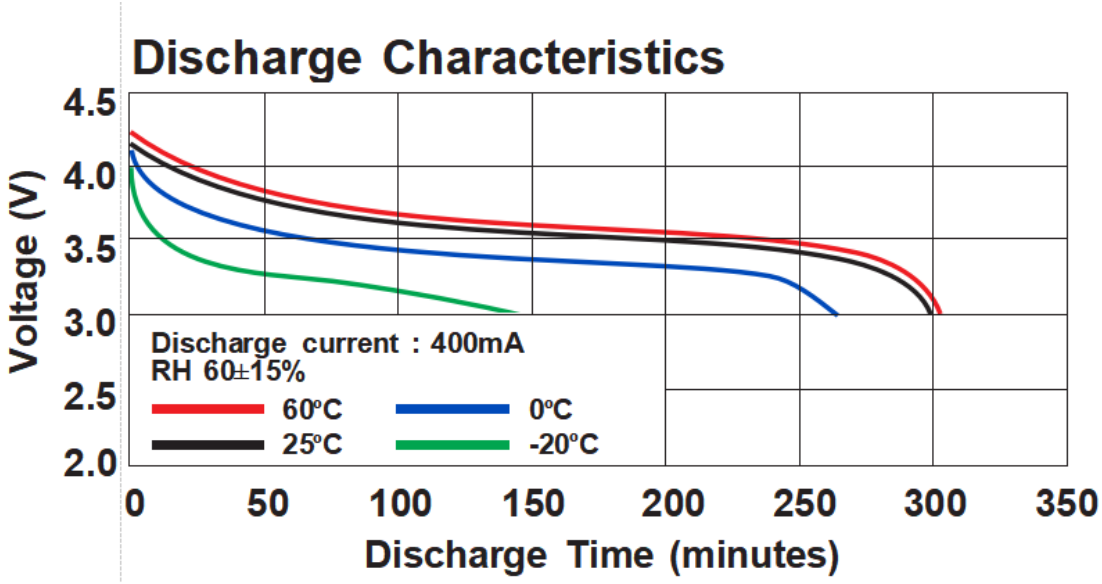

ANNOUNCEMENT

- Reacting and leaking batteries are considered hazardous waste. Please consult Emergency Procedures below.
- Lithium-ion batteries assembled to offer higher voltages (over 60V) may present electrical shock and arc hazards. Therefore adherence to applicable electrical protection standards (terminal protection, shielding, PPE etc.) is required tAVOID exposure to electrical hazards.
- It is prohibited to disassemble a LiPo battery, this may generate a gas release or cause a fire
- Do not discharge a LiPo battery at a rate exceeding the maximum continuous discharge current specified for it. Otherwise, the battery will overheat and result in battery deterioration, bursting, ballooning, or possibly cause a fire or explosion.
- Do not use a damaged charger that could cause the battery to overcharge or over discharge.
- Do not use batteries with physical damage, such as dented, cracked or leaking batteries.
- Never discharge Batteries at amperage rates higher than specified on Batteries' labels
- Do not apply excessive mechanical stress to the battery.
- Avoid excessively hot and humid conditions, especially when batteries are fully charged. Do not place batteries in direct sunlight, on hot surfaces or in hot locations.
- Do not charge the battery in a closed container.
- Let batteries cool down prior to charging.