3.7V Lithium Polymer Battery Data Sheet

Model: 454570

Please Find More:

https://www.fpbattery.com/3-7v-1400mah-lithium-polymer-battery/

File Number: A/FP4570-13173

File Version: 01

CONTACT

CUSTOMER SERVICE
86.755.3682.7358
sales@fpbattery.com
Hours of Operation:
9:00am-6:00pm CST, Monday to Friday

LEARN MORE ON:
https://www.fpbattery.com/

DNK POWER COMPANY LIMITED

BATTERY SPECIFICATION

Part Number	DNK 454570
Nominal Voltage	3.7 V
Nominal Capacity	1400 mAh
Internal Impedence	<60mΩ
Charge Voltage	4.2V
Recommended Charge Current	0.2 C
Allowed Max Charge Current	0.5 C
Output Voltage Range	4.2 - 2.5 V
Recommended Discharge Current	0.2 C
Max Continuous Discharge Current	1 C
Pulse Discharge Current	3 C (10 mS)
Discharge Cut-off Voltage	2.5± 0.05V
Cycle Life to 80% Health	500 (0.2C, 25°C)

1

1 YEAR WARRANTY

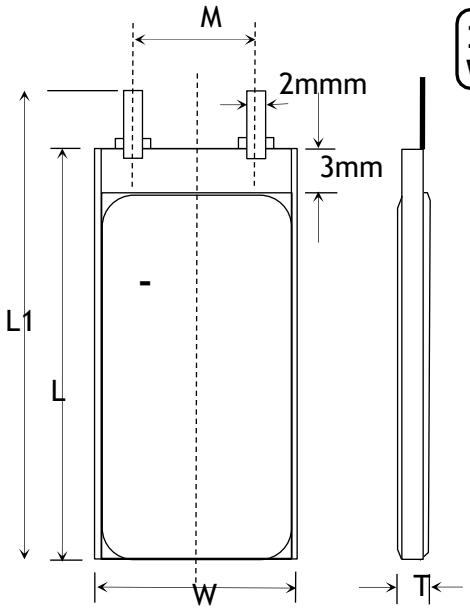

Item	Parameter (mm)
T	4
W	45
M	10
L	70
L_1	72
BL	72 ± 1
CL	100

ENVIRONMENTAL SPECIFICATIONS

Charging Temperature Range	0 - 45°C
Discharging Temperature Range	-20 - 60°C
Storage Period 1 Week	-20 - 45°C
Storage Period 1 Month	-10 - 45°C
Storage Period 6 Months	0 - 35°C

BATTERY PROTECTION

Over Charge	4.275 ± 50mV
Over Discharge	2.5V ± 50mV
Over Current	3A to 5A
Short Circuit	Yes

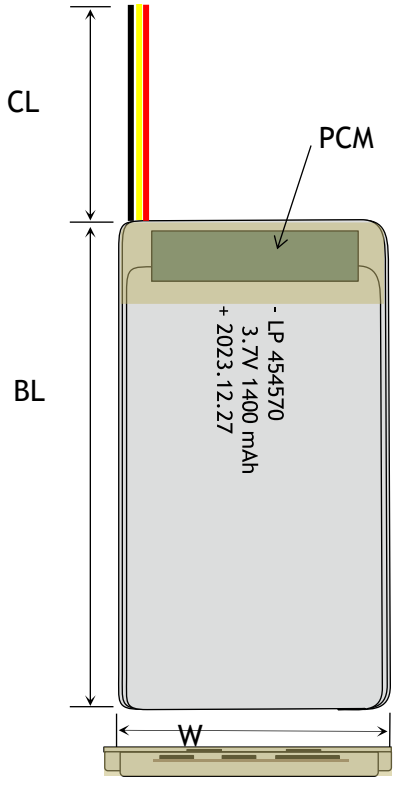

MECHANICAL SPECIFICATIONS

Dimensions	72x 45 x 4 mm(L*W*T)
Weight	Around 23 g
Battery Terminals	WC/ FL *

CERTIFICATION

Certification Approval	PLEASE CONSULT SALES

* WC=With Connector FL=Flying Leads UWP=Blue Wrapped PVC BWP=Black Wrapped PVC BC= Bare Cell

RELATIVE CURVES

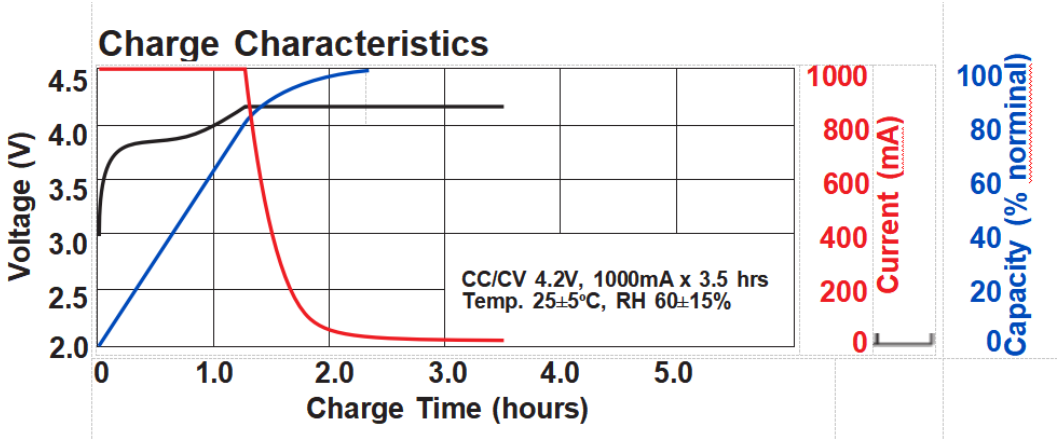

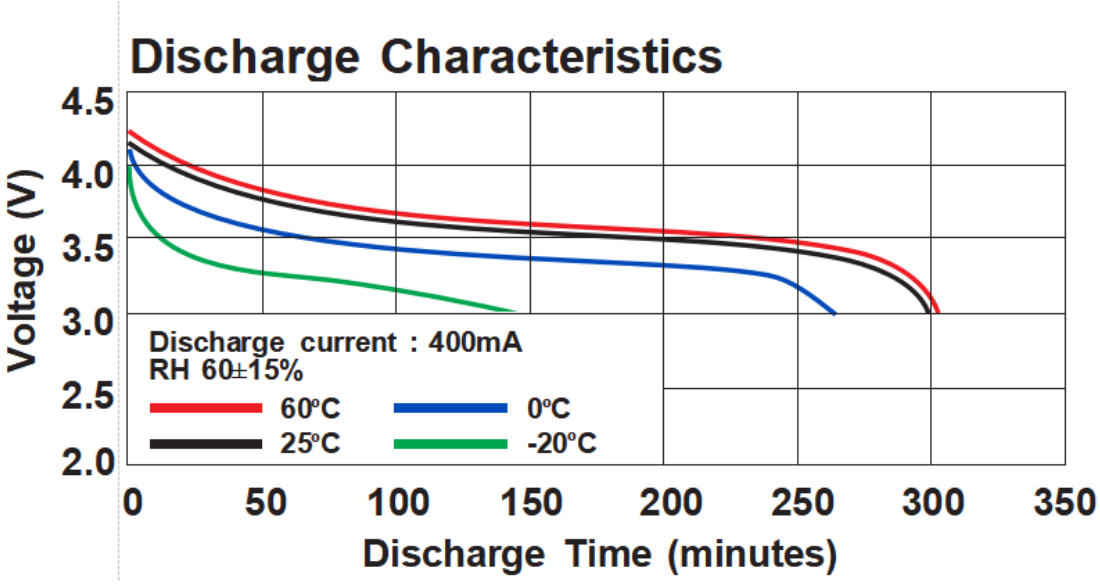

ANNOUNCEMENT

- Be aware that many of the more expensive LiPo chargers will automatically detect the cell count of the battery being charged; cheaper chargers will require a manual setting.
- Never directly connect the terminals with metal objects. This will short-circuit Batteries, resulting in heat and electrical discharge.
- Do not store together with fire accelerating products
- Do not discharge you LiPo cells below 3.00V per cell (e.g. 9.00V for a 3S pack) as this will damage the cells and dramatically reduce the life of your cells. If you do accidentally discharge them below 3.00V per cell, leave them for 30 minutes and if the voltage recovers to over 3.30V per cell then they should be OK to use them again. If they do not recover to at least 3.00V per cell then I'm afraid you have damaged them and they should be disposed of (Please see below for the correct method of disposal).
- Never store batteries inside a Vehicle.
- ALWAYS immediately disconnect the charging cord from the wall outlet if batteries or equipment develop heat/smoke, unusual odors, or show evidence of bulging (changes in shape or geometry).
- Avoid passive or active short-circuiting of the battery.
- Avoid physical damage and short circuiting.
- NEVER alter or disassemble a Lipo battery.
- Read the Product Specification and respect the maximum voltage (4.2V/cell). Never charge higher than 4.25V, which is the maximum voltage. Charging with a higher voltage will irreparably damage the battery and may lead to the start of a fire.
- Check cell voltage after the first charge to verify that the voltage has not exceeded the maximum charge voltage (Please refer to Chart 1). Check the

voltage of each cell via the balance connector to verify that the voltage of each cell has not exceeded the maximum value.