3.7V Lithium Polymer Battery Data Sheet

Model: 454071

Please Find More:

https://www.fpbattery.com/3-7v-1300mah-lithium-polymer-battery/

File Number: A/FP4071-16634

File Version: 01

CONTACT

CUSTOMER SERVICE
86.755.3682.7358
sales@fpbattery.com
Hours of Operation:
9:00am-6:00pm CST, Monday to Friday

LEARN MORE ON:
https://www.fpbattery.com/

DNK POWER COMPANY LIMITED

BATTERY SPECIFICATION

Part Number	DNK 454071
Nominal Voltage	3.7 V
Nominal Capacity	1300 mAh
Internal Impedence	<60mΩ
Charge Voltage	4.2V
Recommended Charge Current	0.2 C
Allowed Max Charge Current	0.5 C
Output Voltage Range	4.2 - 2.5 V
Recommended Discharge Current	0.2 C
Max Continuous Discharge Current	1 C
Pulse Discharge Current	3 C (10 mS)
Discharge Cut-off Voltage	2.5± 0.05V
Cycle Life to 80% Health	500 (0.2C, 25°C)

1

1 YEAR WARRANTY

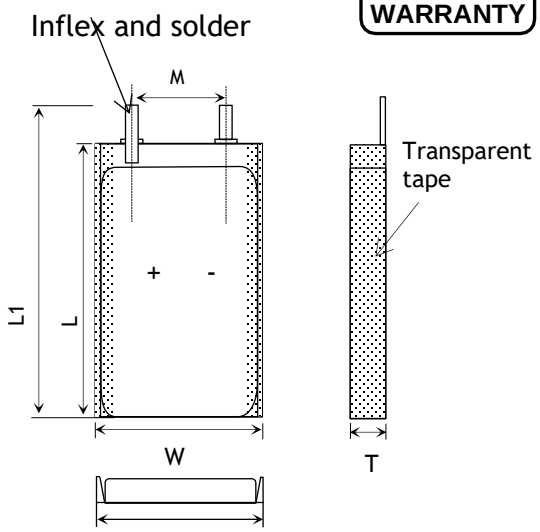

Item	Parameter (mm)
T	4
W	40
M	10
L	71
L_1	73
BL	73 ± 1
CL	100

ENVIRONMENTAL SPECIFICATIONS

Charging Temperature Range	0 - 45°C
Discharging Temperature Range	-20 - 60°C
Storage Period 1 Week	-20 - 45°C
Storage Period 1 Month	-10 - 45°C
Storage Period 6 Months	0 - 35°C

BATTERY PROTECTION

Over Charge	4.275 ± 50mV
Over Discharge	2.5V ± 50mV
Over Current	3A to 5A
Short Circuit	Yes

MECHANICAL SPECIFICATIONS

Dimensions	73x 40 x 4 mm(L*W*T)
Weight	21 g
Battery Terminals	WC/ FL *

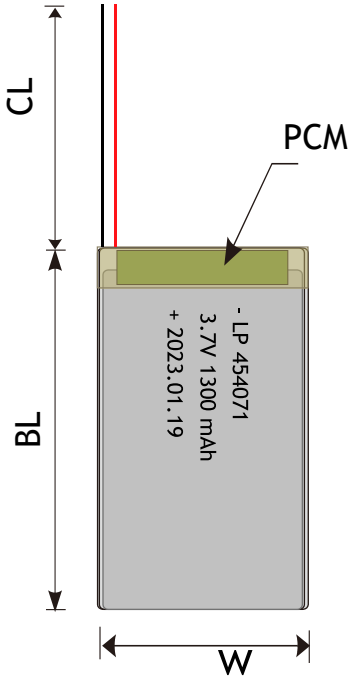

CERTIFICATION

Certification Approval	PLEASE CONSULT SALES

* WC=With Connector FL=Flying Leads UWP=Blue Wrapped PVC
BWP=Black Wrapped PVC BC= Bare Cell

BULK PRODUCTION ACTUAL PICTURES



BARE CELL (BC)



FLYING LEADS (FL)



WITH CONNECTOR (WC)



BLUE WRAPPED PVC (UWP)



BLACK WRAPPED PVC (BWP)

3.7V LIPO BATTERY OPTIONS



Special Ingredients to make batteries work from -40 -85 ° C



Discharging Current up to 100C



Popular JST,Molex,Hirose,Anderson available



LED Power Indicator



Power Button



Upgrade to LifePo4 tech and life circle up to 1500

RELATIVE CURVES

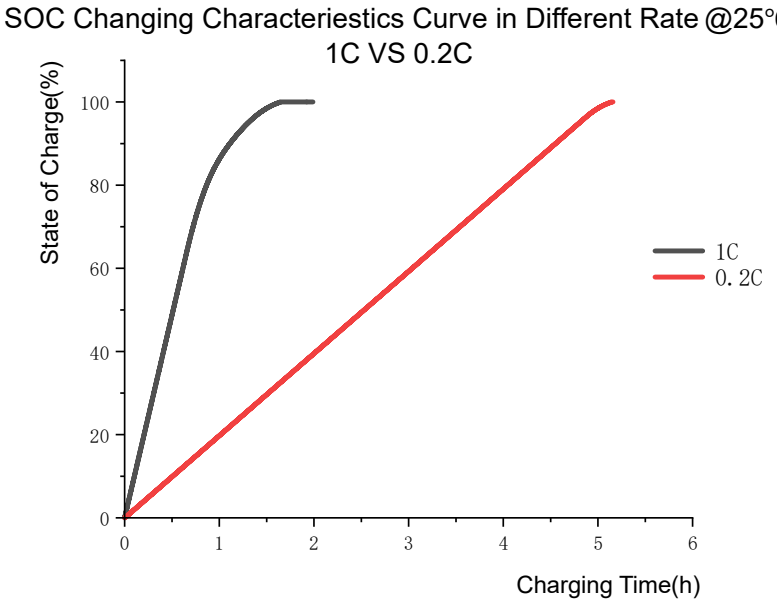

Charge & Discharge Characteriestics in different Rate@25℃

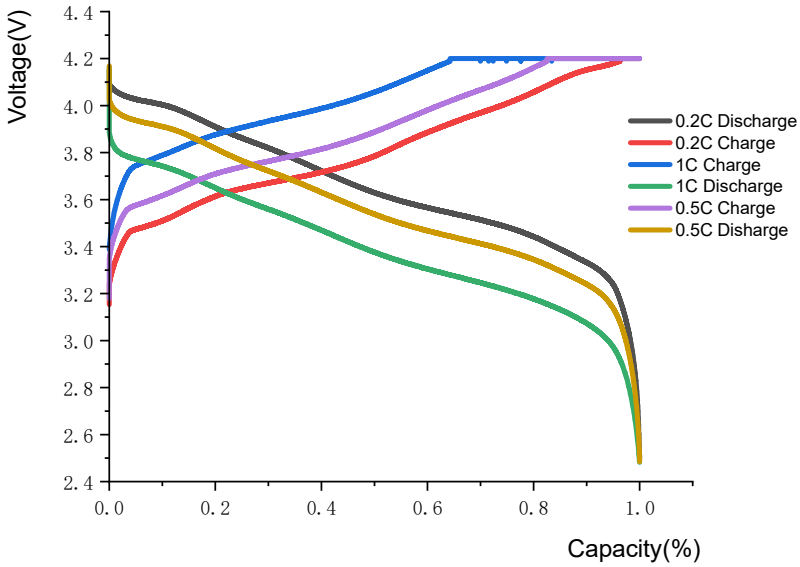

ANNOUNCEMENT

- Never disassemble, modify, puncture, mechanically shock, or short circuit the battery. Leakage, smoke emission, ignition, explosion, or fire, which may result in personal injury and property damage, can occur.
- Storing LiPo batteries at temperatures higher than 170°F (76°C) for more than 2 hours may result in battery damage or possibly fire.
- Set up dedicated charging area. Area must be free of combustible materials. Maintain space between charging batteries.
- Do not use water to extinguish a buttery fire Use a Class ABC dry fire extinguisher.
- Heat kills Lipos, the hotter a battery gets, the shorter the lifespan will be.
- Do not dispose of the battery in the regular trash.
- Do not expose the battery to high temperatures to avoid overheating.
- Avoid frequent shutdowns and restarts of the device on the way to using the battery.
- NEVER charge batteries at temperatures below 32°F (0℃) or above 105°F (40℃).
- Do not overcharge the battery and observe the charger and battery charge time instructions.
- Never incinerate nor dispose of the cells in a fire. These may cause firing of the cells, which is very dangerous and is prohibited.