3.7V Lithium Polymer Battery Data Sheet

Model: 454050

Please Find More:

https://www.fpbattery.com/3-7v-900mah-lithium-polymer-battery/

File Number: A/FP4050-7403

File Version: 01

CONTACT

CUSTOMER SERVICE
86.755.3682.7358
sales@fpbattery.com
Hours of Operation:
9:00am-6:00pm CST, Monday to Friday

LEARN MORE ON:
https://www.fpbattery.com/

DNK POWER COMPANY LIMITED

BATTERY SPECIFICATION

Part Number	DNK 454050
Nominal Voltage	3.7 V
Nominal Capacity	900 mAh
Internal Impedence	<60mΩ
Charge Voltage	4.2V
Recommended Charge Current	0.2 C
Allowed Max Charge Current	0.5 C
Output Voltage Range	4.2 - 2.5 V
Recommended Discharge Current	0.2 C
Max Continuous Discharge Current	1 C
Pulse Discharge Current	3 C (10 mS)
Discharge Cut-off Voltage	2.5± 0.05V
Cycle Life to 80% Health	500 (0.2C, 25°C)

1

ENVIRONMENTAL SPECIFICATIONS

Charging Temperature Range	0 - 45°C
Discharging Temperature Range	-20 - 60°C
Storage Period 1 Week	-20 - 45°C
Storage Period 1 Month	-10 - 45°C
Storage Period 6 Months	0 - 35°C

BATTERY PROTECTION

Over Charge	4.275 ± 50mV
Over Discharge	2.5V ± 50mV
Over Current	3A to 5A
Short Circuit	Yes

MECHANICAL SPECIFICATIONS

Dimensions	52x 40 x 4 mm(L*W*T)
Weight	15 g
Battery Terminals	WC/ FL *

CERTIFICATION

Certification Approval	PLEASE CONSULT SALES

* WC=With Connector FL=Flying Leads UWP=Blue Wrapped PVC BWP=Black Wrapped PVC BC= Bare Cell

1 YEAR WARRANTY

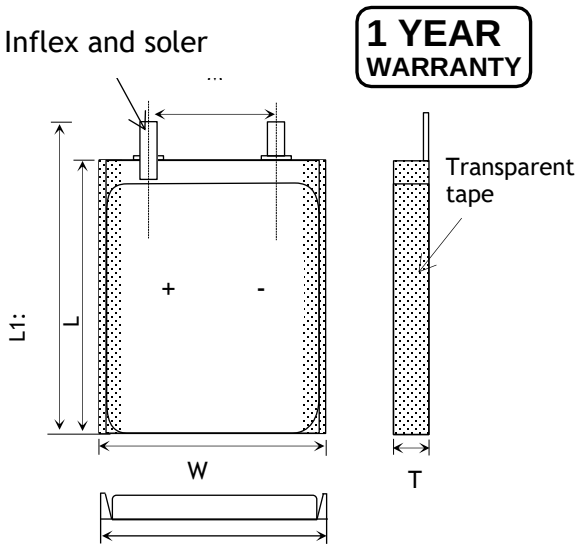

Item	Parameter (mm)
T	4
W	40
M	10
L	50
L_1	52
BL	52 ± 1
CL	100

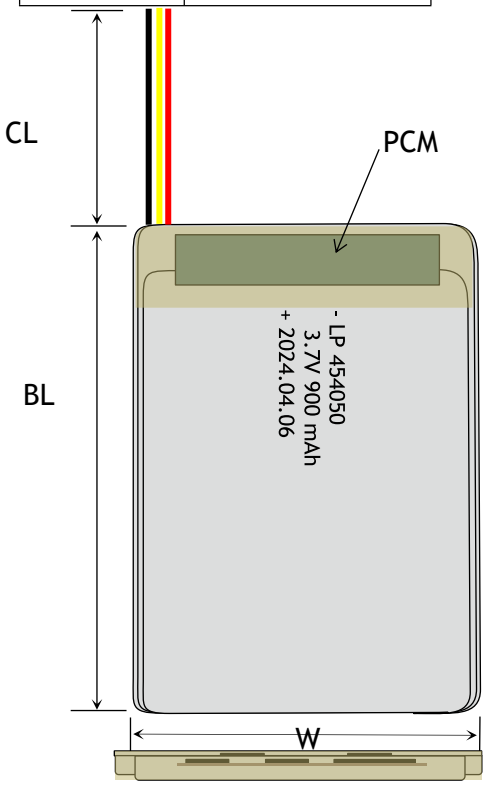

RELATIVE CURVES

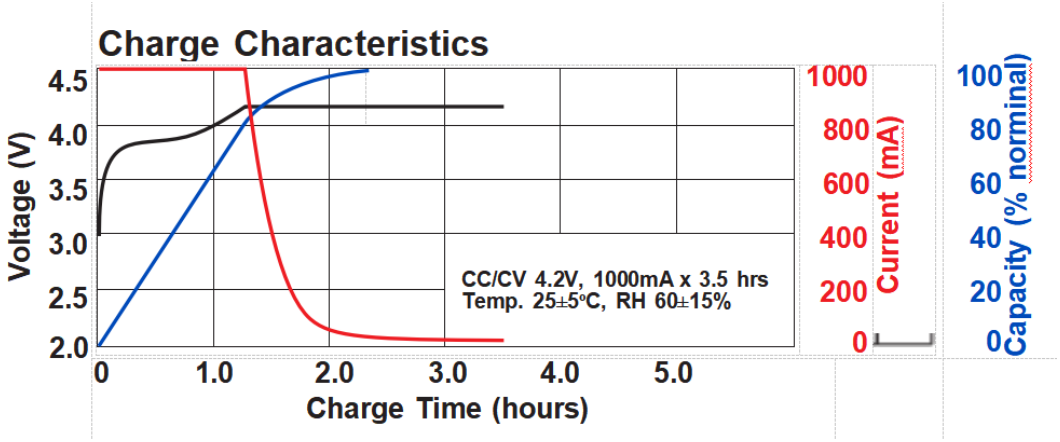

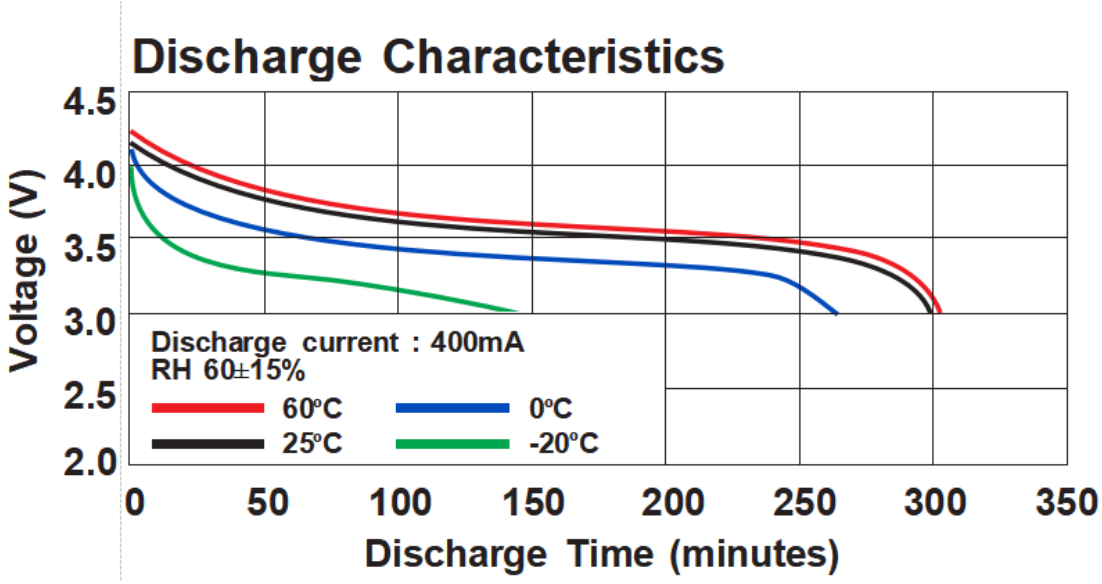

ANNOUNCEMENT

- Always use a balancer board to charge LiPo Battery with more than 1 cell.
- Do not charge cells that have been stored in cold conditions (below 10°C/50°F), let them warm up (above (10°C/50°F), for a minimum of 60 minutes (longer is better).You risk an explosion if you attempt to use cells that have been stored at or below 0°C (32°F), Warm them first for at least 60 minutes (longer is better) above 10°C (50°F) before charging or discharging.
- When not using your LiPo/Li-ion battery pack, store it at 60-70% of the pack's rated capacity. Lithium-ion cells should never be stored fully charged, it is suggested to store them with a voltage around 3.8V. Most of the chargers have a "storage mode" that will either charge or discharge the cell to the proper storage voltage. Experts recommend to put the cells in storage mode after every run, this will help the battery to lengthen the usable life span
- Always follow the manufacturer's safety instructions
- Do not use a damaged charger that could cause the battery to overcharge or over discharge.
- Set up emergency battery isolation container.
- Avoid changing the battery frequently during use.
- Never discharge Batteries to voltage below which they are rated by the manufacturer when measured under load(connected to the vehicle or a charger capable of discharge). Batteries discharged to a voltage lower than the lowest approved voltage may be damaged, resulting in loss of performance and potential fire when batteries are charged.
- Do not leave the battery in a hot vehicle interior.
- Test equipment for short circuits prior to installing batteries.

- Only authorized personnel may ship lithium batteries. Contact EHRS if there is a need to ship batteries.