3.7V Lithium Polymer Battery Data Sheet

Model: 453970

Please Find More:

https://www.fpbattery.com/1200mah-lipo-battery/

File Number: A/FP3970-16799

File Version: 01

CONTACT

CUSTOMER SERVICE
86.755.3682.7358
sales@fpbattery.com
Hours of Operation:
9:00am-6:00pm CST, Monday to Friday

LEARN MORE ON:
https://www.fpbattery.com/

DNK POWER COMPANY LIMITED

BATTERY SPECIFICATION

Part Number	DNK 453970
Nominal Voltage	3.7 V
Nominal Capacity	1200 mAh
Internal Impedence	<60mΩ
Charge Voltage	4.2V
Recommended Charge Current	0.2 C
Allowed Max Charge Current	0.5 C
Output Voltage Range	4.2 - 2.5 V
Recommended Discharge Current	0.2 C
Max Continuous Discharge Current	1 C
Pulse Discharge Current	3 C (10 mS)
Discharge Cut-off Voltage	2.5± 0.05V
Cycle Life to 80% Health	500 (0.2C, 25°C)

1

1 YEAR WARRANTY

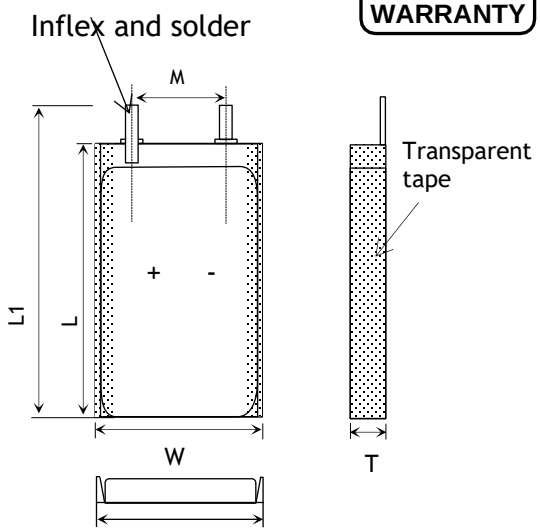

Item	Parameter (mm)
T	4
W	39
M	10
L	70
L_1	72
BL	72 ± 1
CL	100

ENVIRONMENTAL SPECIFICATIONS

Charging Temperature Range	0 - 45°C
Discharging Temperature Range	-20 - 60°C
Storage Period 1 Week	-20 - 45°C
Storage Period 1 Month	-10 - 45°C
Storage Period 6 Months	0 - 35°C

BATTERY PROTECTION

Over Charge	4.275 ± 50mV
Over Discharge	2.5V ± 50mV
Over Current	3A to 5A
Short Circuit	Yes

MECHANICAL SPECIFICATIONS

Dimensions	72x 39 x 4 mm(L*W*T)
Weight	20 g
Battery Terminals	WC/ FL *

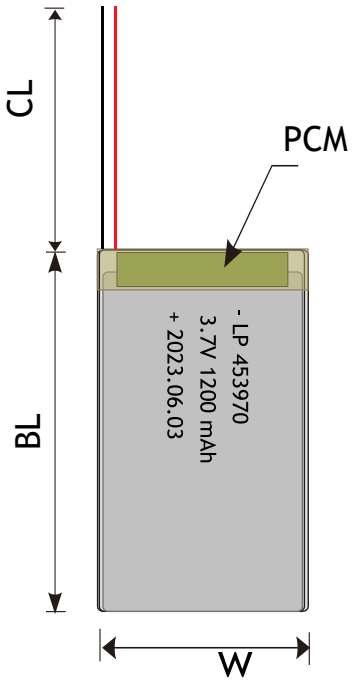

CERTIFICATION

Certification Approval	PLEASE CONSULT SALES

* WC=With Connector FL=Flying Leads UWP=Blue Wrapped PVC BWP=Black Wrapped PVC BC= Bare Cell

BULK PRODUCTION ACTUAL PICTURES



BARE CELL (BC)



FLYING LEADS (FL)



WITH CONNECTOR (WC)



BLUE WRAPPED PVC (UWP)



BLACK WRAPPED PVC (BWP)

3.7V LIPO BATTERY OPTIONS



Special Ingredients to make batteries work from -40 -85 ° C



Discharging Current up to 100C



Popular JST,Molex,Hirose,Anderson available



LED Power Indicator



Power Button



Upgrade to LifePo4 tech and life circle up to 1500

RELATIVE CURVES

Charge & Discharge Characteriestics in different Rate@25℃

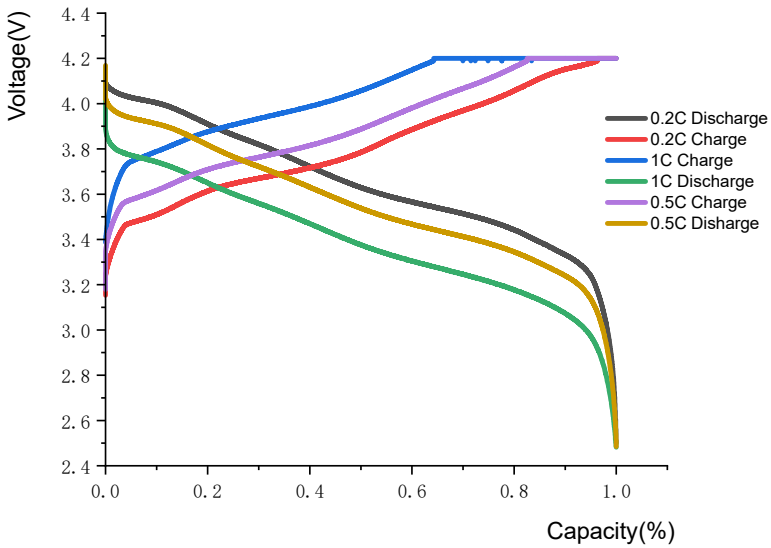

State of Charge Characteriestics @1C 25℃

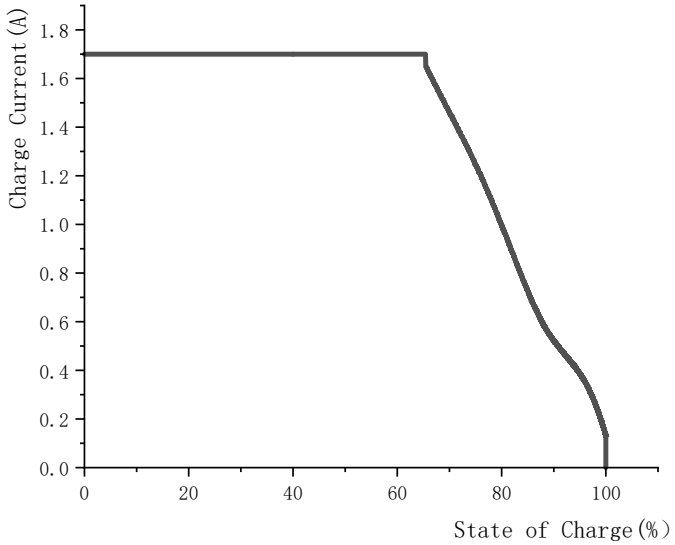

ANNOUNCEMENT

- Charge on non-conductive, non-combustible surfaces.
- The battery must be protected from physical contact with any other part of the model.
- Have a class ABC or CO2 fire extinguisher nearby the storage area.
- Do not expose LiPo batteries to direct sunlight or leave in a hot environment (inside an automobile in hot weather) for extended periods of time.
- The discharge temperature range is between 32°F (0°C) and 113°F (45°C).
- Never use a charger that is NOT specifically designed to charge Lithium Polymer cells.
- Every time a battery is not used actively (e.g. for more than 3 days), it should be placed in the storage area tAVOID being damaged and becoming unsafe.
- Do not apply excessive mechanical stress to the battery.
- If safe to do so, fully discharge batteries that are to be disposed of.
- Never discharge the battery cells below 3.2V.
- Do not expose the battery to direct sunlight for extended periods of time.