3.7V Lithium Polymer Battery Data Sheet

Model: 453960

Please Find More:

https://www.fpbattery.com/3-7v-1000mah-lithium-polymer-battery/

File Number: A/FP3960-12890

File Version: 01

CONTACT

CUSTOMER SERVICE
86.755.3682.7358
sales@fpbattery.com
Hours of Operation:
9:00am-6:00pm CST, Monday to Friday

LEARN MORE ON:
https://www.fpbattery.com/

DNK POWER COMPANY LIMITED

BATTERY SPECIFICATION

Part Number	DNK 453960
Nominal Voltage	3.7 V
Nominal Capacity	1055 mAh
Internal Impedence	<60mΩ
Charge Voltage	4.2V
Recommended Charge Current	0.2 C
Allowed Max Charge Current	0.5 C
Output Voltage Range	4.2 - 2.5 V
Recommended Discharge Current	0.2 C
Max Continuous Discharge Current	1 C
Pulse Discharge Current	3 C (10 mS)
Discharge Cut-off Voltage	2.5± 0.05V
Cycle Life to 80% Health	500 (0.2C, 25°C)

1

1 YEAR WARRANTY

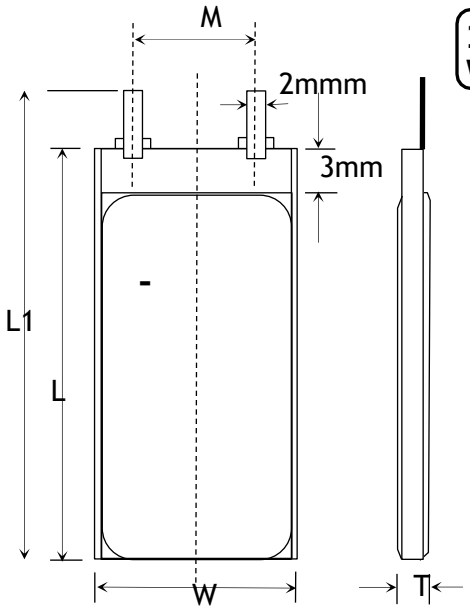

Item	Parameter (mm)
T	4
W	39
M	10
L	60
L_1	62
BL	62 ± 1
CL	100

ENVIRONMENTAL SPECIFICATIONS

Charging Temperature Range	0 - 45°C
Discharging Temperature Range	-20 - 60°C
Storage Period 1 Week	-20 - 45°C
Storage Period 1 Month	-10 - 45°C
Storage Period 6 Months	0 - 35°C

BATTERY PROTECTION

Over Charge	4.275 ± 50mV
Over Discharge	2.5V ± 50mV
Over Current	3A to 5A
Short Circuit	Yes

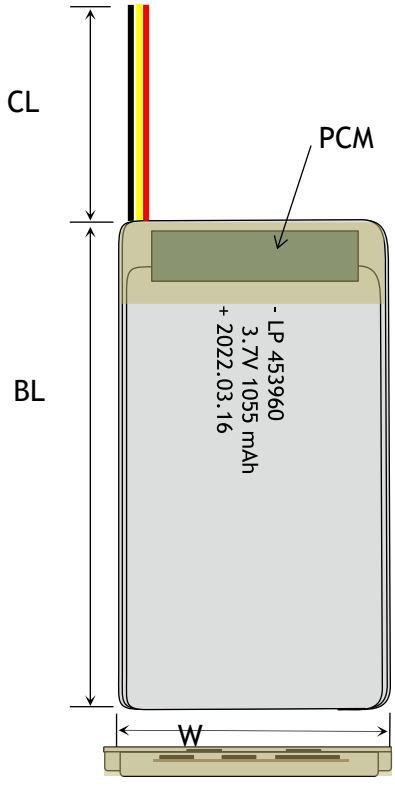

MECHANICAL SPECIFICATIONS

Dimensions	62x 39 x 4 mm(L*W*T)
Weight	Around 17 g
Battery Terminals	WC/ FL *

CERTIFICATION

Certification Approval	PLEASE CONSULT SALES

* WC=With Connector FL=Flying Leads UWP=Blue Wrapped PVC BWP=Black Wrapped PVC BC= Bare Cell

RELATIVE CURVES

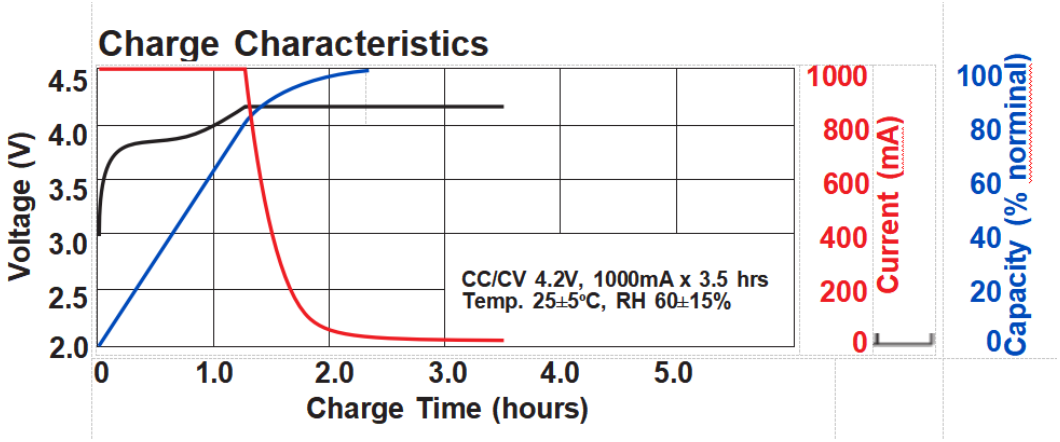

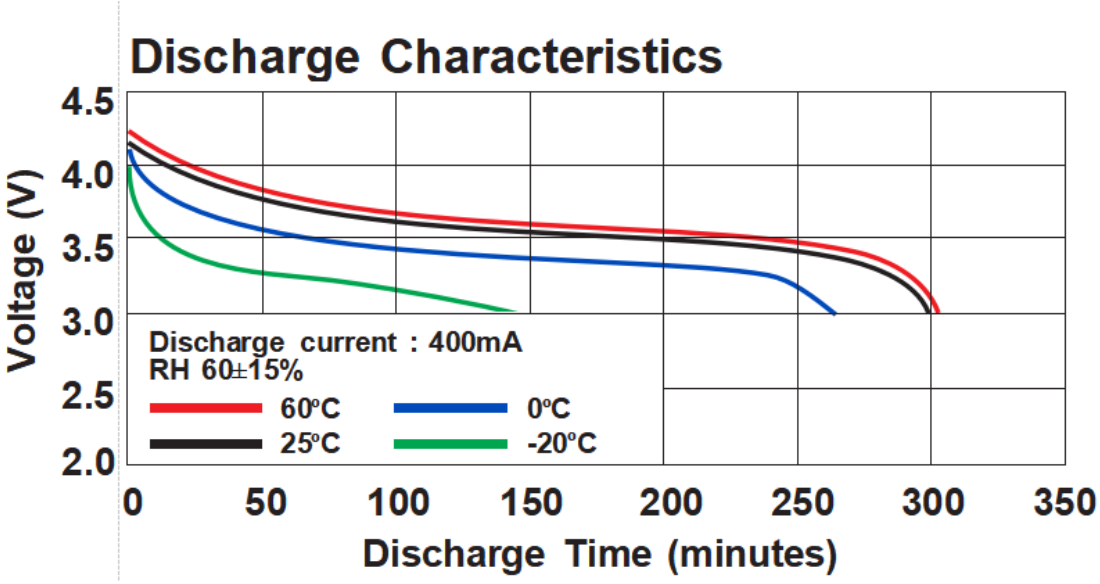

ANNOUNCEMENT

- AVOID storing Li-ion batteries with metal objects, including in a drawer with coins.
- Do not short the wires of your LiPo battery. This is very dangerous and can cause a fire or even an explosion. If you accidentally short the wires of your LiPo battery, either cover it with a fire blanket, or put it in a non-conductive fire-proof container and place it outside away from all flammable objects for at least 30 minutes as chemical reactions can take this long before a fire starts.
- ALWAYS read and follow the manufacturer's instructions for charging, use, maintenance, and storage.
- NEVER attempt to extinguish this type of fire yourself – portable fire extinguishers have proven to be ineffective in extinguishing Li-Ion and LiPo battery fires.
- Never store or charge the battery inside your car or in extreme temperatures. Extreme temperatures might ignite the battery and cause fire. 7) Store the battery in a location inaccessible to children. Be sure that children do not remove the battery from the charger or model.
- If the battery becomes hot, smokes, or becomes abnormal, stop using it immediately.
- AVOID storing Li-ion batteries with metal objects, including in a drawer with coins.
- Obtain infrared thermometer for remote battery temperature monitoring.
- Heat kills Lipos, the hotter a battery gets, the shorter the lifespan will be.
- Never burn, overheat, disassemble, short-circuit, solder, puncture, crush or otherwise mutilate battery packs or cells.
- Never discharge your Li-Po battery below the Lowest Discharge Voltage. This may cause irreversible damage which will deteriorate battery performance and cycle life. An ESC with an adjustable low voltage cutoff is MANDATORY!