3.7V Lithium Polymer Battery Data Sheet

Model: 453759

Please Find More:

https://www.fpbattery.com/3-7v-900mah-lithium-polymer-battery/

File Number: A/FP3759-13848

File Version: 01

CONTACT

CUSTOMER SERVICE
86.755.3682.7358
sales@fpbattery.com
Hours of Operation:
9:00am-6:00pm CST, Monday to Friday

LEARN MORE ON:
https://www.fpbattery.com/

DNK POWER COMPANY LIMITED

BATTERY SPECIFICATION

Part Number	DNK 453759
Nominal Voltage	3.7 V
Nominal Capacity	980 mAh
Internal Impedence	<60mΩ
Charge Voltage	4.2V
Recommended Charge Current	0.2 C
Allowed Max Charge Current	0.5 C
Output Voltage Range	4.2 – 2.5 V
Recommended Discharge Current	0.2 C
Max Continuous Discharge Current	1 C
Pulse Discharge Current	3 C (10 mS)
Discharge Cut-off Voltage	2.5± 0.05V
Cycle Life to 80% Health	500 (0.2C, 25°C)

1

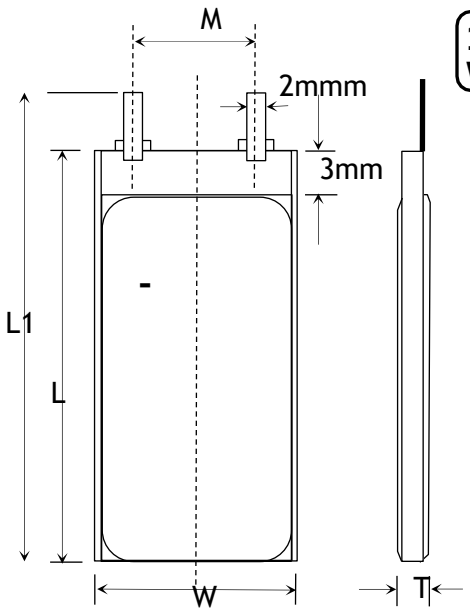

1 YEAR WARRANTY

Item	Parameter (mm)
T	4
W	37
M	10
L	59
L_1	61
BL	61 ± 1
CL	100

ENVIRONMENTAL SPECIFICATIONS

Charging Temperature Range	0 – 45°C
Discharging Temperature Range	-20 – 60°C
Storage Period 1 Week	-20 – 45°C
Storage Period 1 Month	-10 – 45°C
Storage Period 6 Months	0 – 35°C

BATTERY PROTECTION

Over Charge	4.275 ± 50mV
Over Discharge	2.5V ± 50mV
Over Current	3A to 5A
Short Circuit	Yes

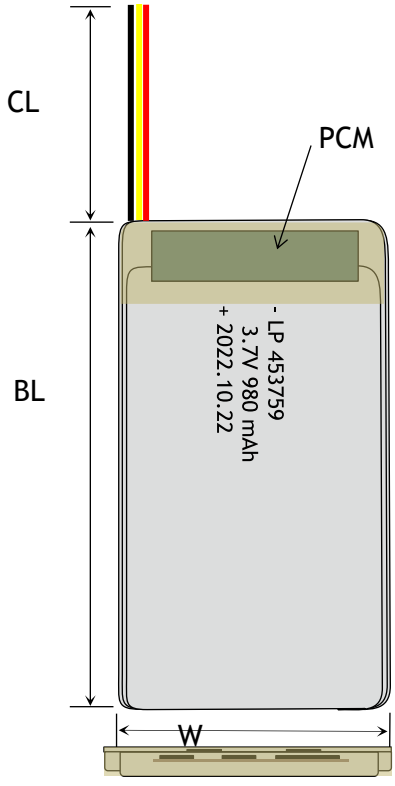

MECHANICAL SPECIFICATIONS

Dimensions	61x 37 x 4 mm(L*W*T)
Weight	Around 16 g
Battery Terminals	WC/ FL *

CERTIFICATION

Certification Approval	PLEASE CONSULT SALES

* WC=With Connector FL=Flying Leads UWP=Blue Wrapped PVC BWP=Black Wrapped PVC BC= Bare Cell

RELATIVE CURVES

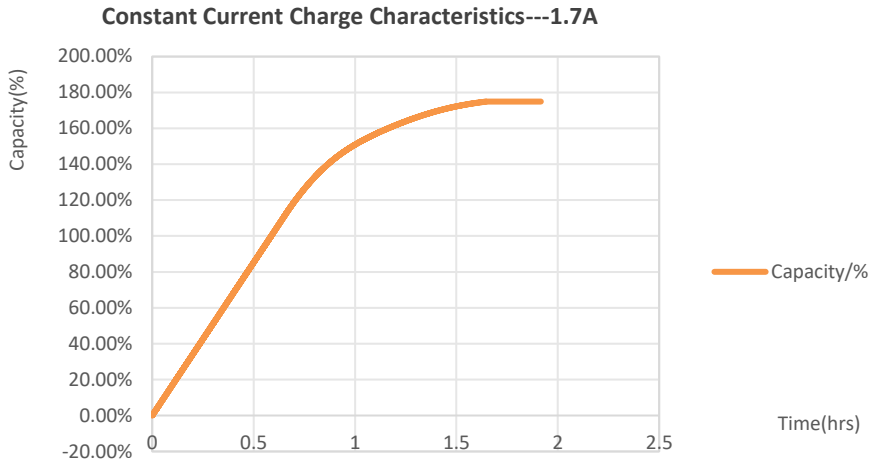

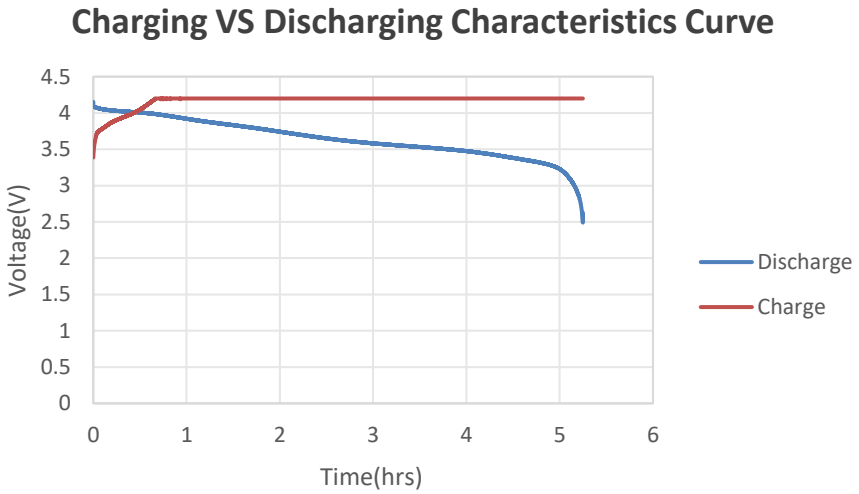

ANNOUNCEMENT

- Never, under ANY circumstances let the positive and negative battery leads touchThis can lead to cell ballooning, cell damage, fire or an explosion. If you notice your LiPo battery pack is If necessary, put the battery in a non-combustible bucket or container and observe it for 15 minutes . swelling, disconnect the charging device immediately.
- Have a class ABC or CO2 fire extinguisher nearby the storage area.
- Never incinerate nor dispose of the cells in a fire. These may cause firing of the cells, which is very dangerous and is prohibited.
- Use recommended methods to make battery terminal connections.
- Avoid using charging methods other than wireless chargers.
- Never remove the battery from its protective plastic case.
- Exercise caution with new products like E-Scooters where all safety considerations may not be recognized or that may encourage cheap knock-offs built without adherent to safety standards.
- Never discharge Batteries to voltage below which they are rated by the manufacturer when measured under load(connected to the vehicle or a charger capable of discharge). Batteries discharged to a voltage lower than the lowest approved voltage may be damaged, resulting in loss of performance and potential fire when batteries are charged.
- Use recommended methods to make battery terminal connections.
- Check the voltage of your LiPo pack before charging with a digital multimeter. Only charge if it is 3.30V or greater per cell (e.g. 9.90V for a 3S pack).
- NEVER charge a Li-ion or LiPo battery overnight and unattended.