3.7V Lithium Polymer Battery Data Sheet

Model: 453666

Please Find More:

https://www.fpbattery.com/3-7v-1000mah-lithium-polymer-battery/

File Number: A/FP3666-17206

File Version: 01

CONTACT

CUSTOMER SERVICE
86.755.3682.7358
sales@fpbattery.com
Hours of Operation:
9:00am-6:00pm CST, Monday to Friday

LEARN MORE ON:
https://www.fpbattery.com/

DNK POWER COMPANY LIMITED

BATTERY SPECIFICATION

Part Number	DNK 453666
Nominal Voltage	3.7 V
Nominal Capacity	1070 mAh
Internal Impedence	<60mΩ
Charge Voltage	4.2V
Recommended Charge Current	0.2 C
Allowed Max Charge Current	0.5 C
Output Voltage Range	4.2 - 2.5 V
Recommended Discharge Current	0.2 C
Max Continuous Discharge Current	1 C
Pulse Discharge Current	3 C (10 mS)
Discharge Cut-off Voltage	2.5± 0.05V
Cycle Life to 80% Health	500 (0.2C, 25°C)

1

1 YEAR WARRANTY

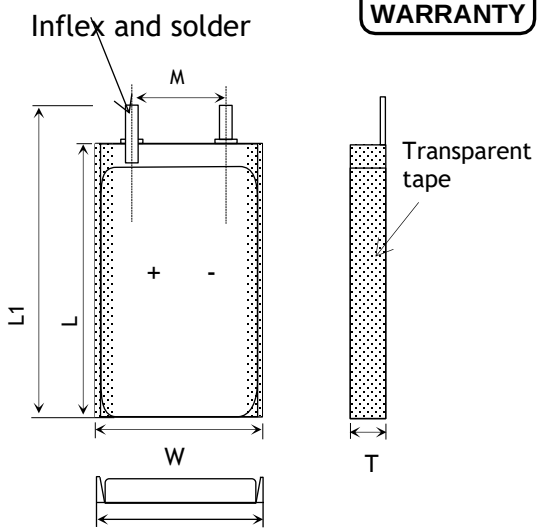

Item	Parameter (mm)
T	4
W	36
M	10
L	66
L_1	68
BL	68 ± 1
CL	100

ENVIRONMENTAL SPECIFICATIONS

Charging Temperature Range	0 - 45°C
Discharging Temperature Range	-20 - 60°C
Storage Period 1 Week	-20 - 45°C
Storage Period 1 Month	-10 - 45°C
Storage Period 6 Months	0 - 35°C

BATTERY PROTECTION

Over Charge	4.275 ± 50mV
Over Discharge	2.5V ± 50mV
Over Current	3A to 5A
Short Circuit	Yes

MECHANICAL SPECIFICATIONS

Dimensions	68x 36 x 4 mm(L*W*T)
Weight	17 g
Battery Terminals	WC/ FL *

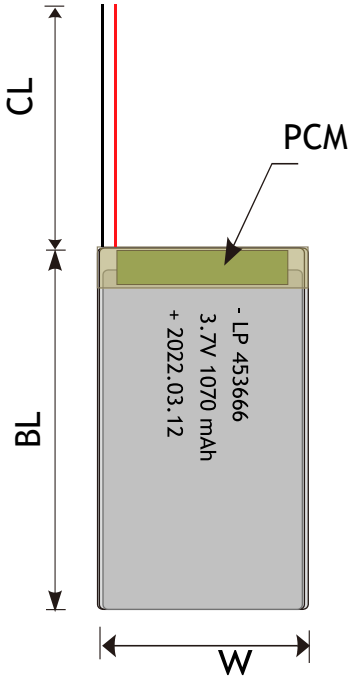

CERTIFICATION

Certification Approval	PLEASE CONSULT SALES

* WC=With Connector FL=Flying Leads UWP=Blue Wrapped PVC
BWP=Black Wrapped PVC BC= Bare Cell

BULK PRODUCTION ACTUAL PICTURES



BARE CELL (BC)



FLYING LEADS (FL)



WITH CONNECTOR (WC)



BLUE WRAPPED PVC (UWP)



BLACK WRAPPED PVC (BWP)

3.7V LIPO BATTERY OPTIONS



Special Ingredients to make batteries work from -40 -85 ° C



Discharging Current up to 100C



Popular JST,Molex,Hirose,Anderson available



LED Power Indicator



Power Button



Upgrade to LifePo4 tech and life circle up to 1500

RELATIVE CURVES

Charge & Discharge Characteriestics in different Rate@25℃

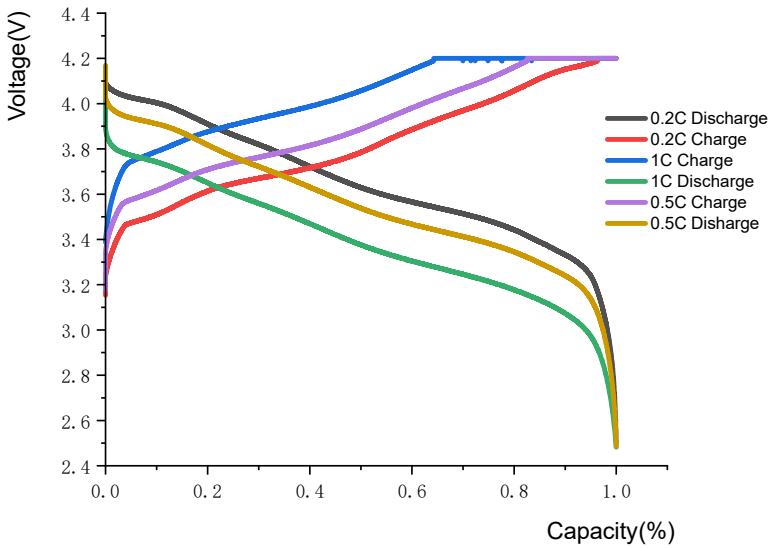

State of Charge Characteriestics @1C 25℃

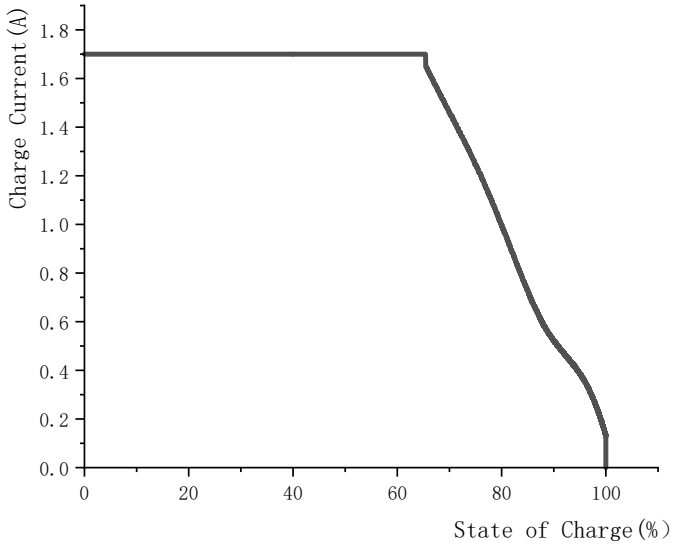

ANNOUNCEMENT

- Only charge in an isolated area away from other flammable materials and on a non conductive and non flammable surface. Use a fireproof container. LiPo battery fires can not be extinguished. If a fire occurs, contain it by covering it with a fire blanket until it burns itself out.
- Emergency Response and Disposal
- Do not expose LiPo batteries to direct sunlight or leave in a hot environment (inside an automobile in hot weather) for extended periods of time.
- Never alter, puncture or impact Batteries or related components.
- Always consult the manufacturerGspecific battery manual for proper instructions.
- For best practice store standard lipo batteries at 3.80 volts +/.05 volts per cell. Or at the manufacturer's suggested storage voltage for non standard chemistry's
- ALWAYS activate the building fire alarm system and call 9-1-1 to notify the fire department.
- ALWAYS immediately disconnect the charging cord from the wall outlet if batteries or equipment develop heat/smoke, unusual odors, or show evidence of bulging (changes in shape or geometry).
- Never store or charge the battery inside your car or in extreme temperatures. Extreme temperatures might ignite the battery and cause fire. 7) Store the battery in a location inaccessible to children. Be sure that children do not remove the battery from the charger or model.
- Charge only with an approved LiPo charger, according to the parameters for the particular battery
- Obtain container to safely transport LiPo batteries between the labs and use locations. Remove from vehicle once at the destination.