3.7V Lithium Polymer Battery Data Sheet

Model: 453658

Please Find More:

https://www.fpbattery.com/3-7v-900mah-lithium-polymer-battery/

File Number: A/FP3658-14185

File Version: 01

CONTACT

CUSTOMER SERVICE
86.755.3682.7358
sales@fpbattery.com
Hours of Operation:
9:00am-6:00pm CST, Monday to Friday

LEARN MORE ON:
https://www.fpbattery.com/

DNK POWER COMPANY LIMITED

BATTERY SPECIFICATION

Part Number	DNK 453658
Nominal Voltage	3.7 V
Nominal Capacity	940 mAh
Internal Impedence	<60mΩ
Charge Voltage	4.2V
Recommended Charge Current	0.2 C
Allowed Max Charge Current	0.5 C
Output Voltage Range	4.2 – 2.5 V
Recommended Discharge Current	0.2 C
Max Continuous Discharge Current	1 C
Pulse Discharge Current	3 C (10 mS)
Discharge Cut-off Voltage	2.5± 0.05V
Cycle Life to 80% Health	500 (0.2C, 25°C)

1

1 YEAR WARRANTY

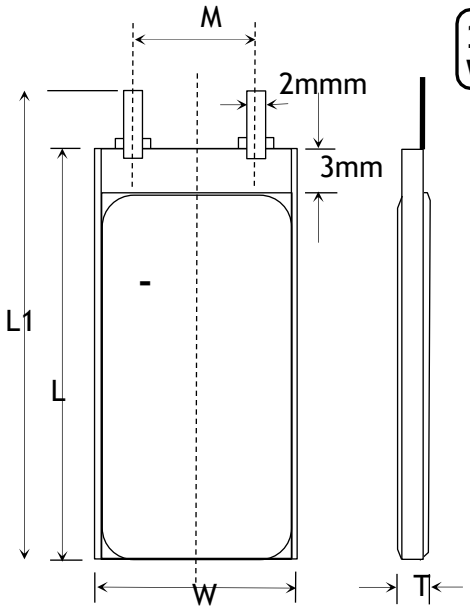

Item	Parameter (mm)
T	4
W	36
M	10
L	58
L_1	60
BL	60 ± 1
CL	100

ENVIRONMENTAL SPECIFICATIONS

Charging Temperature Range	0 – 45°C
Discharging Temperature Range	-20 – 60°C
Storage Period 1 Week	-20 – 45°C
Storage Period 1 Month	-10 – 45°C
Storage Period 6 Months	0 – 35°C

BATTERY PROTECTION

Over Charge	4.275 ± 50mV
Over Discharge	2.5V ± 50mV
Over Current	3A to 5A
Short Circuit	Yes

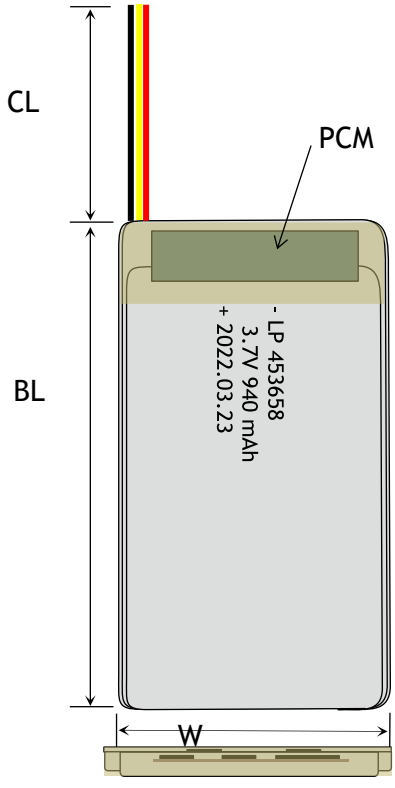

MECHANICAL SPECIFICATIONS

Dimensions	60x 36 x 4 mm(L*W*T)
Weight	Around 15 g
Battery Terminals	WC/ FL *

CERTIFICATION

Certification Approval	PLEASE CONSULT SALES

* WC=With Connector FL=Flying Leads UWP=Blue Wrapped PVC BWP=Black Wrapped PVC BC= Bare Cell

RELATIVE CURVES

0.2C Discharge Characteristics Curve

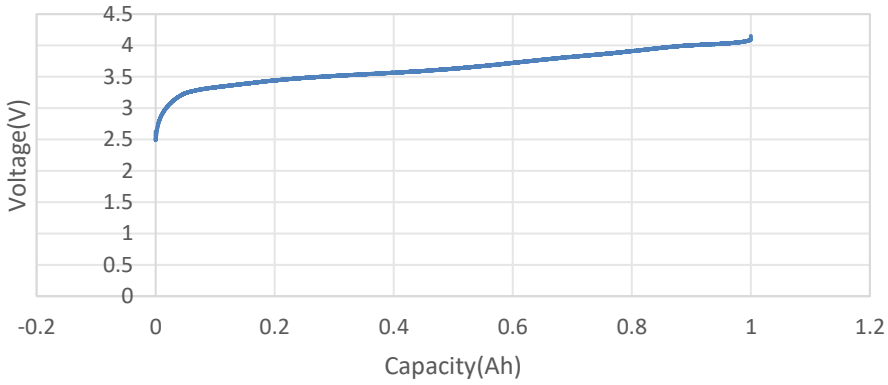

1C Discharge Characteristics Curves

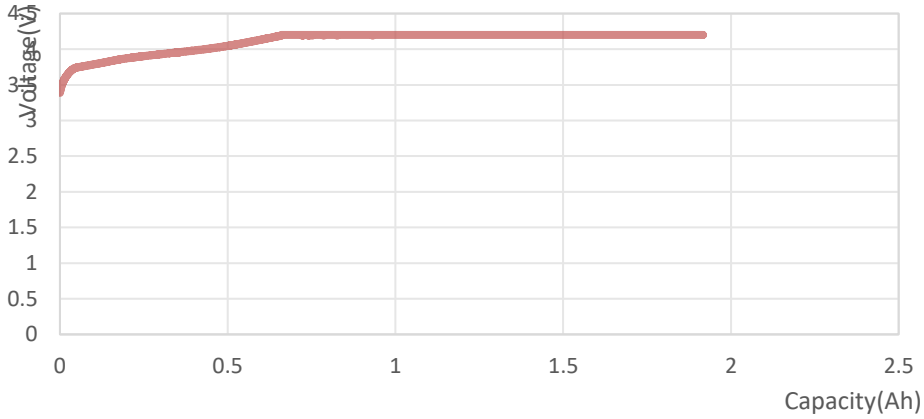

ANNOUNCEMENT

- Do not expose the battery to high temperatures to avoid overheating.
- Never discharge Batteries to voltage below which they are rated by the manufacturer when measured under load(connected to the vehicle or a charger capable of discharge). Batteries discharged to a voltage lower than the lowest approved voltage may be damaged, resulting in loss of performance and potential fire when batteries are charged.
- Do not store LiPo batteries in extreme temperatures below 0C or above 50C.
- Never store batteries inside a Vehicle.
- Then recycle the battery according to the instructions of your country/region. Never dispose of a LIPO battery with domestic waste.
- Never leave batteries unattended where they can be damaged by someone.
- Do not reverse the polarity.
- Place batteries suspected of being damaged into the emergency battery isolation container and monitor temperature.
- Prevent arcing by turning the charger off before disconnecting the battery.
- Never charge a LiPo pack that has ballooned or swelled due to over/under charging or from a crash.
- Avoid short-circuiting the battery. Though short-circuiting for short time will not damage the battery, doing so for a long time will damage the battery and may overheat the battery causing burns, fire or explosion.