3.7V Lithium Polymer Battery Data Sheet

Model: 453644

Please Find More:

https://www.fpbattery.com/3-7v-650mah-lithium-polymer-battery/

File Number: A/FP3644-6921

File Version: 01

CONTACT

CUSTOMER SERVICE
86.755.3682.7358
sales@fpbattery.com
Hours of Operation:
9:00am-6:00pm CST, Monday to Friday

LEARN MORE ON:
https://www.fpbattery.com/

DNK POWER COMPANY LIMITED

BATTERY SPECIFICATION

Part Number	DNK 453644
Nominal Voltage	3.7 V
Nominal Capacity	715 mAh
Internal Impedence	<60mΩ
Charge Voltage	4.2V
Recommended Charge Current	0.2 C
Allowed Max Charge Current	0.5 C
Output Voltage Range	4.2 - 2.5 V
Recommended Discharge Current	0.2 C
Max Continuous Discharge Current	1 C
Pulse Discharge Current	3 C (10 mS)
Discharge Cut-off Voltage	2.5± 0.05V
Cycle Life to 80% Health	500 (0.2C, 25°C)

1

1 YEAR WARRANTY

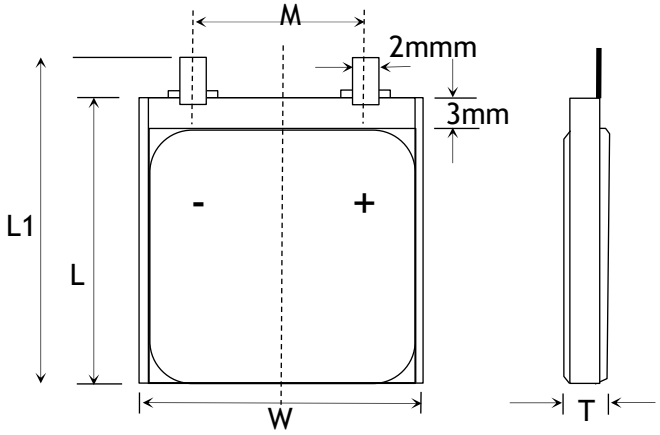

Item	Parameter (mm)
T	4
W	36
M	10
L	44
L_1	46
BL	46 ± 1
CL	100

ENVIRONMENTAL SPECIFICATIONS

Charging Temperature Range	0 - 45°C
Discharging Temperature Range	-20 - 60°C
Storage Period 1 Week	-20 - 45°C
Storage Period 1 Month	-10 - 45°C
Storage Period 6 Months	0 - 35°C

BATTERY PROTECTION

Over Charge	4.275 ± 50mV
Over Discharge	2.5V ± 50mV
Over Current	3A to 5A
Short Circuit	Yes

MECHANICAL SPECIFICATIONS

Dimensions	46x 36 x 4 mm(L*W*T)
Weight	Around 11 g
Battery Terminals	WC/ FL *

CERTIFICATION

Certification Approval	PLEASE CONSULT SALES

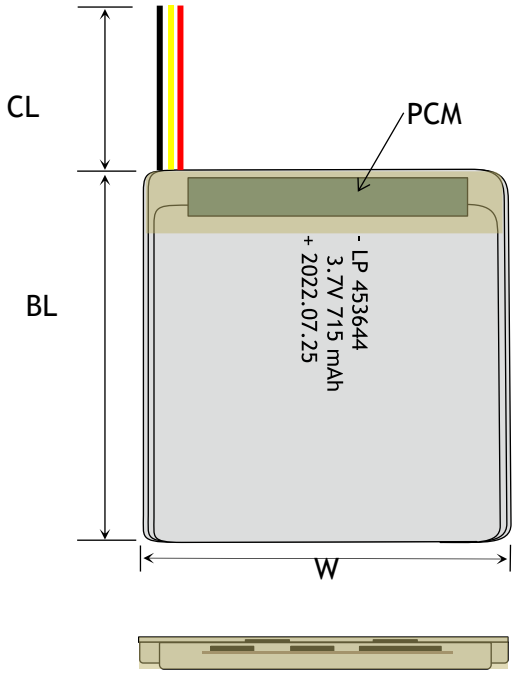

* WC=With Connector FL=Flying Leads UWP=Blue Wrapped PVC
BWP=Black Wrapped PVC BC= Bare Cell

RELATIVE CURVES

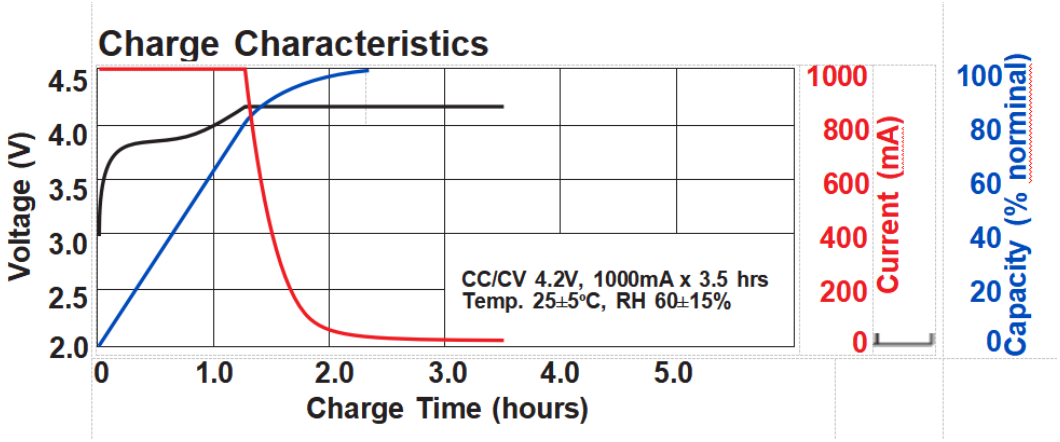

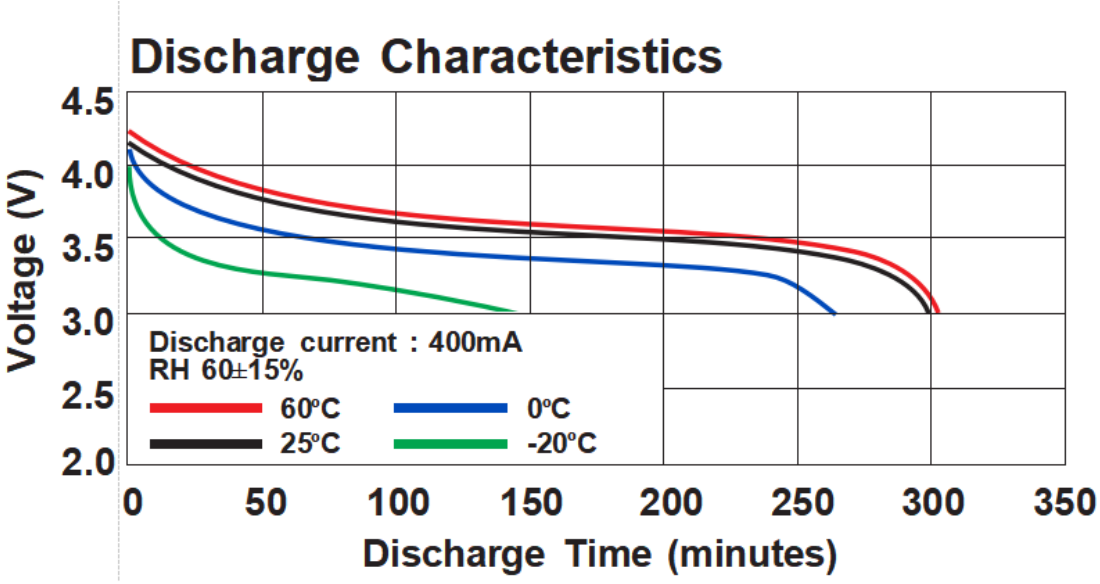

ANNOUNCEMENT

- Avoid using chargers with long charging times.
- Never expose Batteries to extreme temperatures or direct sunlight. The temperature range must be between 40-120° F (4-49° C).
- Avoid bending or twisting the battery.
- Emergency Response and Disposal
- Never overcharge Batteries beyond the capacity listed on Batteries labels.
- Protect from the frost, and also temperatures above 60 degrees Centigrade. Batteries should never be in the sun, on hot surfaces.
- Obtain container to safely transport LiPo batteries between the labs and use locations. Remove from vehicle once at the destination.
- Before starting work, if applicable, understand one-hand working techniques.
- NEVER charge a device under a pillow, on a bed, on a carpet, on a couch, or other combustible material.
- ALWAYS download a copy of the Safety Data Sheet (SDS) for the battery on the manufacturer's website or by contacting the manufacturer. Review and understand the hazards of the battery before storing, charging, or using.
- Never put batteries in your pocket or non fireproof bags this may cause the battery to short circuit.