3.7V Lithium Polymer Battery Data Sheet

Model: 453570

Please Find More:

https://www.fpbattery.com/3-7v-1100mah-lithium-polymer-battery/

File Number: A/FP3570-19159

File Version: 01

CONTACT

CUSTOMER SERVICE
86.755.3682.7358
sales@fpbattery.com
Hours of Operation:
9:00am-6:00pm CST, Monday to Friday

LEARN MORE ON:
https://www.fpbattery.com/

DNK POWER COMPANY LIMITED

BATTERY SPECIFICATION

Part Number	DNK 453570
Nominal Voltage	3.7 V
Nominal Capacity	1100 mAh
Internal Impedence	<60mΩ
Charge Voltage	4.2V
Recommended Charge Current	0.2 C
Allowed Max Charge Current	0.5 C
Output Voltage Range	4.2 - 2.5 V
Recommended Discharge Current	0.2 C
Max Continuous Discharge Current	1 C
Pulse Discharge Current	3 C (10 mS)
Discharge Cut-off Voltage	2.5± 0.05V
Cycle Life to 80% Health	500 (0.2C, 25°C)

1

ENVIRONMENTAL SPECIFICATIONS

Charging Temperature Range	0 - 45°C
Discharging Temperature Range	-20 - 60°C
Storage Period 1 Week	-20 - 45°C
Storage Period 1 Month	-10 - 45°C
Storage Period 6 Months	0 - 35°C

BATTERY PROTECTION

Over Charge	4.275 ± 50mV
Over Discharge	2.5V ± 50mV
Over Current	3A to 5A
Short Circuit	Yes

MECHANICAL SPECIFICATIONS

Dimensions	72x 35 x 4 mm(L*W*T)
Weight	Around 18 g
Battery Terminals	WC/ FL *

CERTIFICATION

Certification Approval	PLEASE CONSULT SALES

* WC=With Connector FL=Flying Leads UWP=Blue Wrapped PVC BWP=Black Wrapped PVC BC= Bare Cell

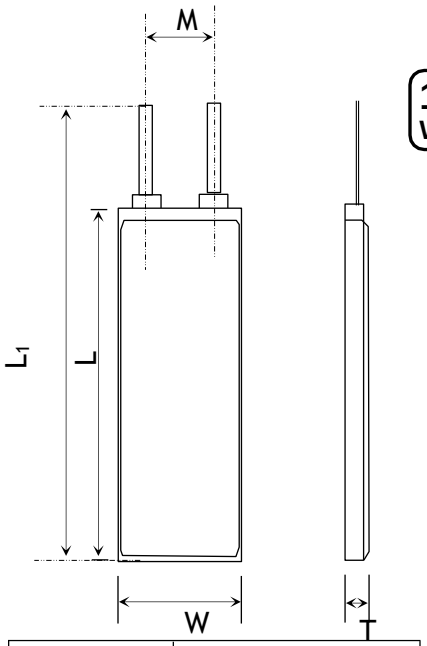

1 YEAR WARRANTY

Item	Parameter (mm)
T	4
W	35
M	10
L	70
L_1	72
BL	72 ± 1
CL	100

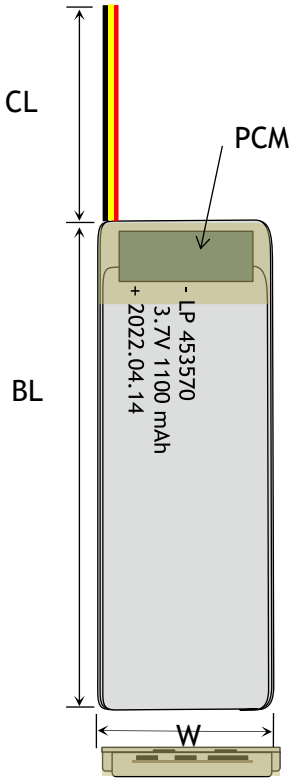

BULK PRODUCTION ACTUAL PICTURES



BARE CELL (BC)



FLYING LEADS (FL)



WITH CONNECTOR (WC)



BLUE WRAPPED PVC (UWP)



BLACK WRAPPED PVC (BWP)

3.7V LIPO BATTERY OPTIONS

Special Ingredients to make batteries work from -40 -85 ° C

Discharging Current up to 100C

Popular JST,Molex,Hirose,Anderson available

LED Power Indicator

Power Button

Upgrade to LifePo4 tech and life circle up to 1500

RELATIVE CURVES

Charge & Discharge Characteriestics in different Rate@25℃

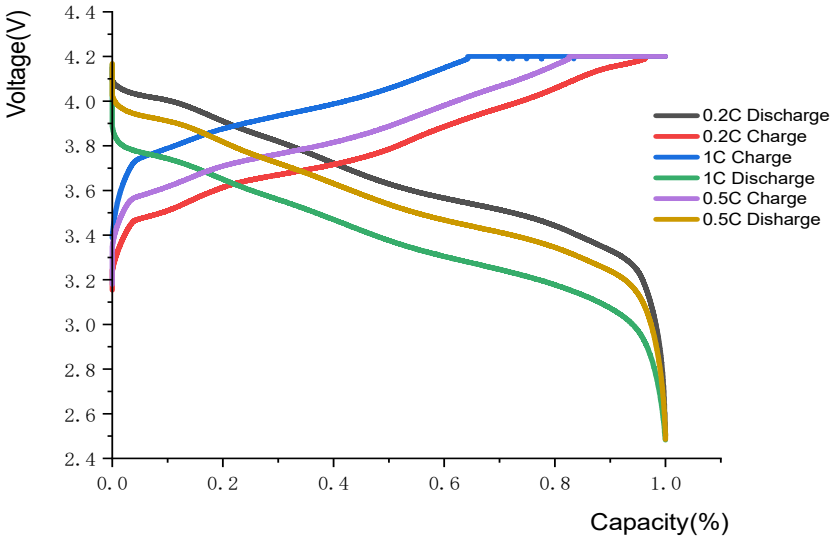

0.2C Discharging Characteriestics Curve@25℃

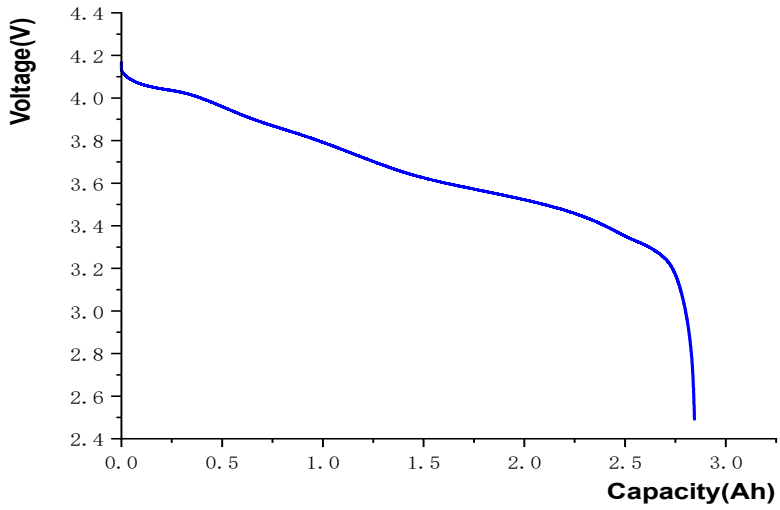

ANNOUNCEMENT

- l When charging LiPo batteries, they must be charged at the voltage of the number of cells in series. Example: A 5s4p pack must be charged as a 5 cell pack.
- Do not put batteries in contact with conductive materials, water, seawater, strong oxidizers
- Before starting work,ensure that a written experimental protocol including safety information is available.
- Do not charge LiPo batteries in the model as you can not successfully monitor and move them quickly if necessary.
- Do not expose the battery to temperature extremes, such as high or low temperatures.
- Regularly check the condition of the battery. Do not use if damaged or swollen
- Never overcharge Batteries beyond the capacity listed on Batteries labels.
- Never immerse the battery in water or allow it to get wet.
- Never directly connect the terminals with metal objects. This will short-circuit Batteries, resulting in heat and electrical discharge.
- Never expose Batteries to extreme temperatures or direct sunlight. The temperature range must be between 40-120° F (4-49° C).
- When using the adapter, make sure that the voltage and current requirements are met.