3.7V Lithium Polymer Battery Data Sheet

Model: 453543

Please Find More:

https://www.fpbattery.com/3-7v-650mah-lithium-polymer-battery/

File Number: A/FP3543-7017

File Version: 01

CONTACT

CUSTOMER SERVICE
86.755.3682.7358
sales@fpbattery.com
Hours of Operation:
9:00am-6:00pm CST, Monday to Friday

LEARN MORE ON:
https://www.fpbattery.com/

DNK POWER COMPANY LIMITED

BATTERY SPECIFICATION

Part Number	DNK 453543
Nominal Voltage	3.7 V
Nominal Capacity	675 mAh
Internal Impedence	<60mΩ
Charge Voltage	4.2V
Recommended Charge Current	0.2 C
Allowed Max Charge Current	0.5 C
Output Voltage Range	4.2 - 2.5 V
Recommended Discharge Current	0.2 C
Max Continuous Discharge Current	1 C
Pulse Discharge Current	3 C (10 mS)
Discharge Cut-off Voltage	2.5± 0.05V
Cycle Life to 80% Health	500 (0.2C, 25°C)

1

1 YEAR WARRANTY

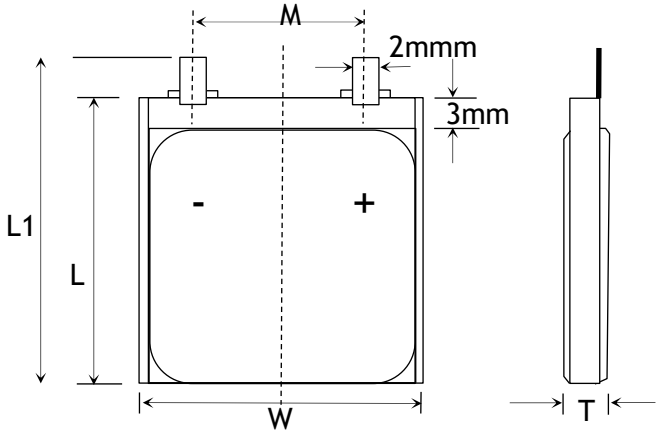

Item	Parameter (mm)
T	4
W	35
M	10
L	43
L_1	45
BL	45 ± 1
CL	100

ENVIRONMENTAL SPECIFICATIONS

Charging Temperature Range	0 - 45°C
Discharging Temperature Range	-20 - 60°C
Storage Period 1 Week	-20 - 45°C
Storage Period 1 Month	-10 - 45°C
Storage Period 6 Months	0 - 35°C

BATTERY PROTECTION

Over Charge	4.275 ± 50mV
Over Discharge	2.5V ± 50mV
Over Current	3A to 5A
Short Circuit	Yes

MECHANICAL SPECIFICATIONS

Dimensions	45x 35 x 4 mm(L*W*T)
Weight	Around 11 g
Battery Terminals	WC/ FL *

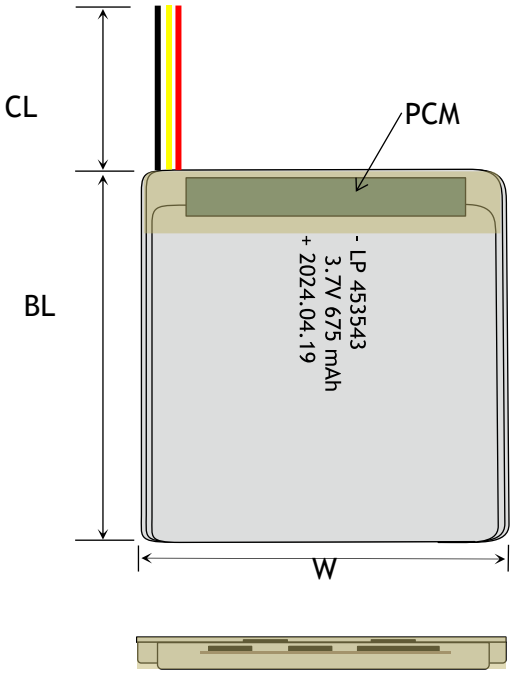

CERTIFICATION

Certification Approval	PLEASE CONSULT SALES

* WC=With Connector FL=Flying Leads UWP=Blue Wrapped PVC
BWP=Black Wrapped PVC BC= Bare Cell

RELATIVE CURVES

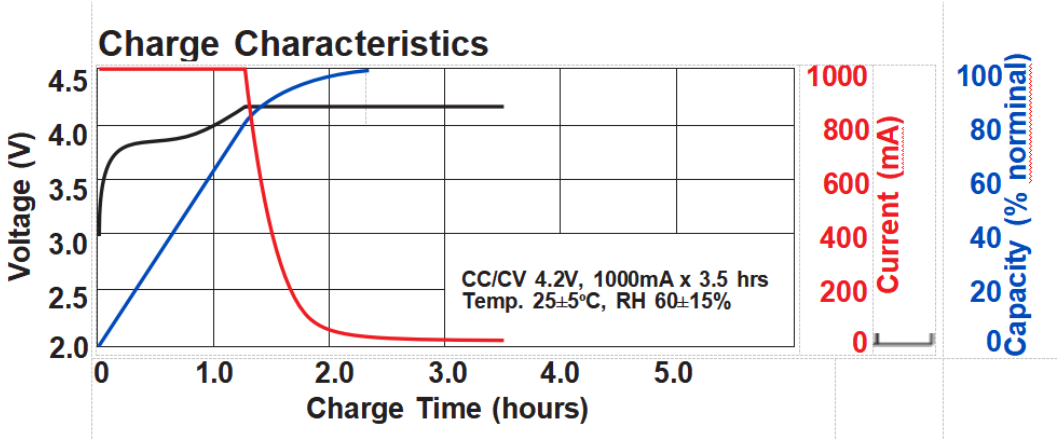

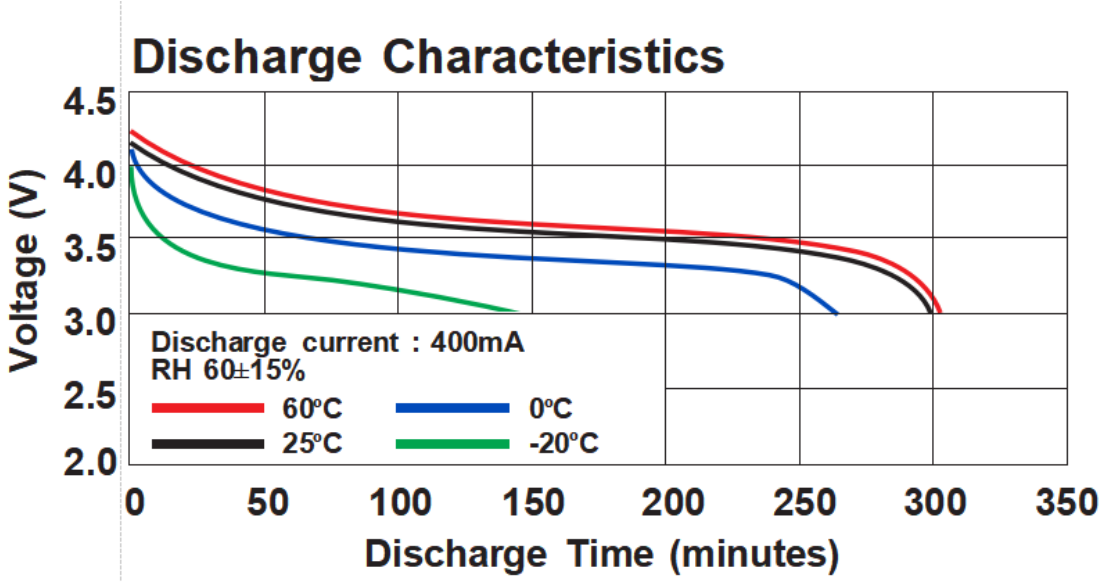

ANNOUNCEMENT

- Never leave batteries unattended where they can be damaged by someone.
- To prevent over-discharging, the battery shall be charged periodically to maintain between 3.6V and 3.9V. The High-performance charger are equipped with a device to prevent further discharging exceeding a specified cut-off voltage.
- Never burn, overheat, disassemble, short-circuit, solder, puncture, crush or otherwise mutilate battery packs or cells.
- Misuse of a Lipo battery may result in the battery generating excessive heat, igniting or exploding. Keep batteries out of the reach of children.
- Do not expose the battery to high temperatures to avoid overheating.
- If you notice hot cells, disconnect the charger and remove any external short circuit if present.
- Dispose of defective Lipos in accordance with local ordinances and in a safe manner.
- Before starting work, if you are designing wearables using lithium-ion batteries, make sure they are easily removeable if they start to react while being worn.
- Never charge a LiPo battery while it is inside your model or other electronic device. If it catches fire, it can lead to total destruction of the item inside which it is being charged.
- Place batteries suspected of being damaged into the emergency battery isolation container and monitor temperature.
- Never leave a battery unattended while charging. During the entire process of charging your LiPo battery, you must constantly observe and monitor the charging process so that you can quickly react to any problems that may occur and to be certain that the battery is being charged properly.