3.7V Lithium Polymer Battery Data Sheet

Model: 453144

Please Find More:

https://www.fpbattery.com/3-7v-600mah-lithium-polymer-battery/

File Number: A/FP3144-10699

File Version: 01

CONTACT

CUSTOMER SERVICE
86.755.3682.7358
sales@fpbattery.com
Hours of Operation:
9:00am-6:00pm CST, Monday to Friday

LEARN MORE ON:
https://www.fpbattery.com/

DNK POWER COMPANY LIMITED

BATTERY SPECIFICATION

Part Number	DNK 453144
Nominal Voltage	3.7 V
Nominal Capacity	615 mAh
Internal Impedence	<60mΩ
Charge Voltage	4.2V
Recommended Charge Current	0.2 C
Allowed Max Charge Current	0.5 C
Output Voltage Range	4.2 - 2.5 V
Recommended Discharge Current	0.2 C
Max Continuous Discharge Current	1 C
Pulse Discharge Current	3 C (10 mS)
Discharge Cut-off Voltage	2.5± 0.05V
Cycle Life to 80% Health	500 (0.2C, 25°C)

1

ENVIRONMENTAL SPECIFICATIONS

Charging Temperature Range	0 - 45°C
Discharging Temperature Range	-20 - 60°C
Storage Period 1 Week	-20 - 45°C
Storage Period 1 Month	-10 - 45°C
Storage Period 6 Months	0 - 35°C

BATTERY PROTECTION

Over Charge	4.275 ± 50mV
Over Discharge	2.5V ± 50mV
Over Current	3A to 5A
Short Circuit	Yes

MECHANICAL SPECIFICATIONS

Dimensions	46x 31 x 4 mm(L*W*T)
Weight	Around 10 g
Battery Terminals	WC/ FL *

CERTIFICATION

Certification Approval	PLEASE CONSULT SALES

* WC=With Connector FL=Flying Leads UWP=Blue Wrapped PVC BWP=Black Wrapped PVC BC= Bare Cell

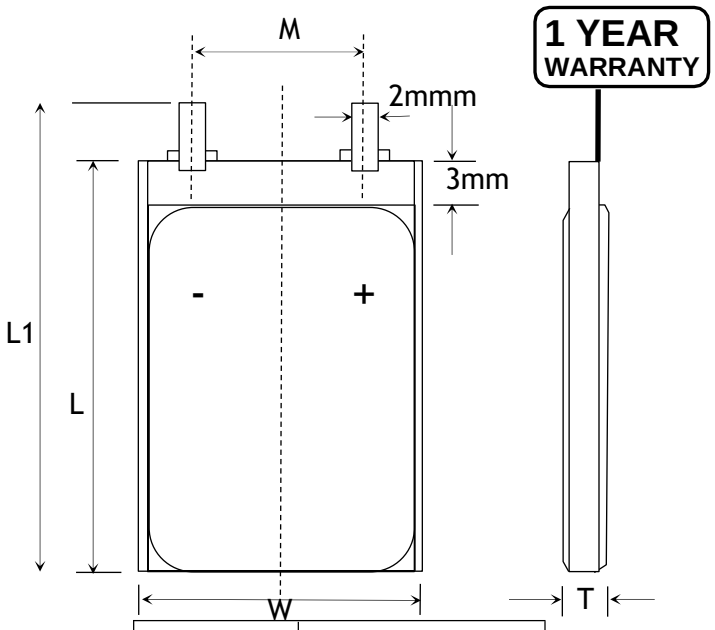

Item	Parameter (mm)
T	4
W	31
M	10
L	44
L_1	46
BL	46 ± 1
CL	100

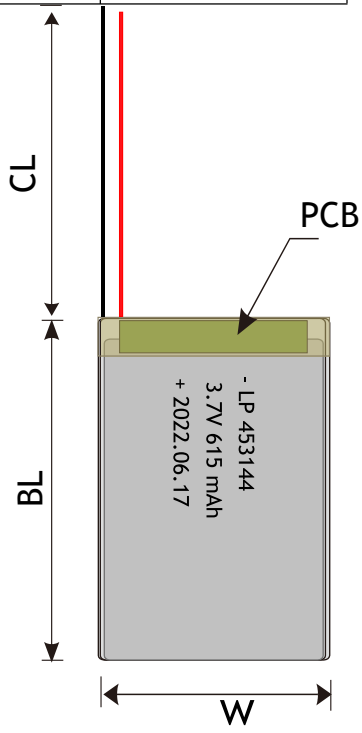

BULK PRODUCTION ACTUAL PICTURES



BARE CELL (BC)



FLYING LEADS (FL)



WITH CONNECTOR (WC)



BLUE WRAPPED PVC (UWP)



BLACK WRAPPED PVC (BWP)

3.7V LIPO BATTERY OPTIONS

Special Ingredients to make batteries work from -40 -85 ° C

Discharging Current up to 100C

Popular JST,Molex,Hirose,Anderson available





LED Power Indicator



Power Button

RELATIVE CURVES

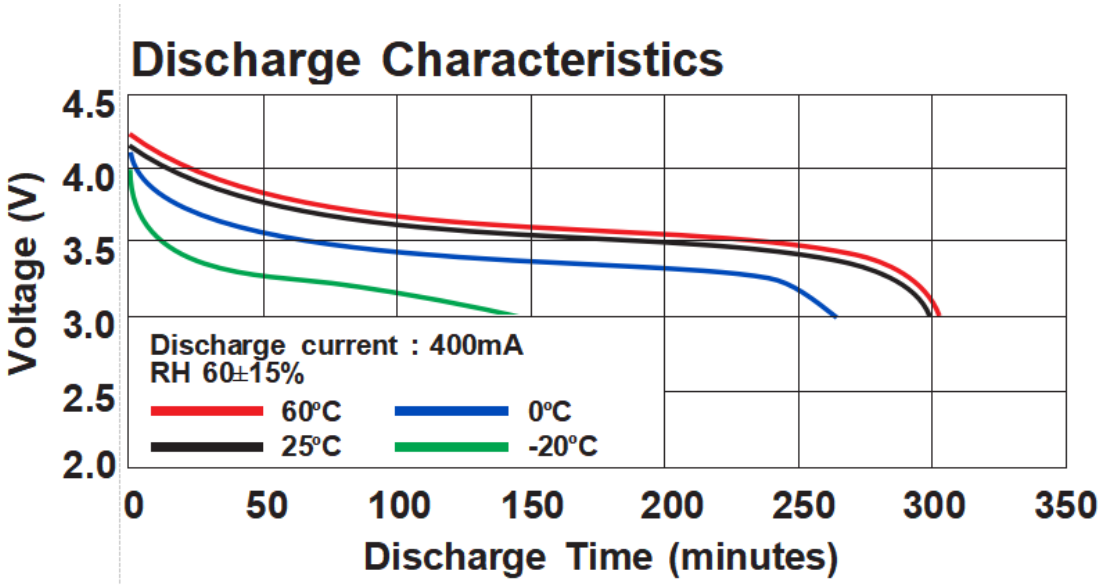

ANNOUNCEMENT

- Store in fire protected, separate areas.
- Protect from the frost, and also temperatures above 60 degrees Centigrade. Batteries should never be in the sun, on hot surfaces.
- Never store batteries inside a Vehicle.
- Always balance charge batteries using the charger's balance charging option. Otherwise, an unbalanced cell may become over charged. This will reduce the life of the battery, and possibly cause a fire which could result in personal injury and property damage.
- Never incinerate nor dispose of the cells in a fire. These may cause firing of the cells, which is very dangerous and is prohibited.
- Storing LiPo batteries at temperatures higher than 170°F (76°C) for more than 2 hours may result in battery damage or possibly fire.
- Storing LiPo batteries at temperatures higher than 170°F (76°C) for more than 2 hours may result in battery damage or possibly fire.
- Then recycle the battery according to the instructions of your country/region. Never dispose of a LIPO battery with domestic waste.
- Avoid using unauthorized charging devices.
- Do not dispose of the battery in the regular trash.
- Always check the voltage of Batteries before each charge session in order to ensure they are at or above the minimum safe starting voltage. If starting voltage is below recommended levels than Batteries have been over discharged or have experienced a failure and should NOT be charged