3.7V Lithium Polymer Battery Data Sheet

Model: 453140

Please Find More:

https://www.fpbattery.com/3-7v-500mah-lithium-polymer-battery/

File Number: A/FP3140-8352

File Version: 01

CONTACT

CUSTOMER SERVICE
86.755.3682.7358
sales@fpbattery.com
Hours of Operation:
9:00am-6:00pm CST, Monday to Friday

LEARN MORE ON:
https://www.fpbattery.com/

DNK POWER COMPANY LIMITED

BATTERY SPECIFICATION

Part Number	DNK 453140
Nominal Voltage	3.7 V
Nominal Capacity	560 mAh
Internal Impedence	<60mΩ
Charge Voltage	4.2V
Recommended Charge Current	0.2 C
Allowed Max Charge Current	0.5 C
Output Voltage Range	4.2 - 2.5 V
Recommended Discharge Current	0.2 C
Max Continuous Discharge Current	1 C
Pulse Discharge Current	3 C (10 mS)
Discharge Cut-off Voltage	2.5± 0.05V
Cycle Life to 80% Health	500 (0.2C, 25°C)

1

ENVIRONMENTAL SPECIFICATIONS

Charging Temperature Range	0 - 45°C
Discharging Temperature Range	-20 - 60°C
Storage Period 1 Week	-20 - 45°C
Storage Period 1 Month	-10 - 45°C
Storage Period 6 Months	0 - 35°C

BATTERY PROTECTION

Over Charge	4.275 ± 50mV
Over Discharge	2.5V ± 50mV
Over Current	3A to 5A
Short Circuit	Yes

MECHANICAL SPECIFICATIONS

Dimensions	42x 31 x 4 mm(L*W*T)
Weight	9 g
Battery Terminals	WC/ FL *

CERTIFICATION

Certification Approval	PLEASE CONSULT SALES

* WC=With Connector FL=Flying Leads UWP=Blue Wrapped PVC BWP=Black Wrapped PVC BC= Bare Cell

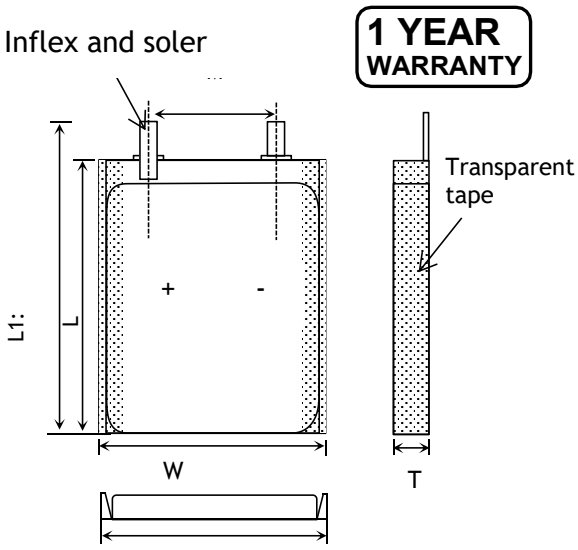

Item	Parameter (mm)
T	4
W	31
M	10
L	40
L_1	42
BL	42 ± 1
CL	100

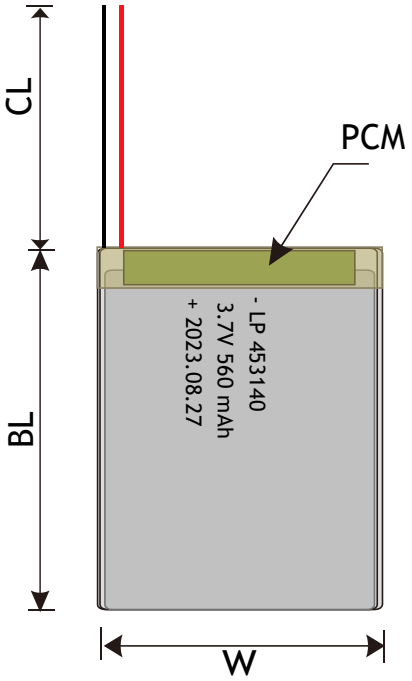

RELATIVE CURVES

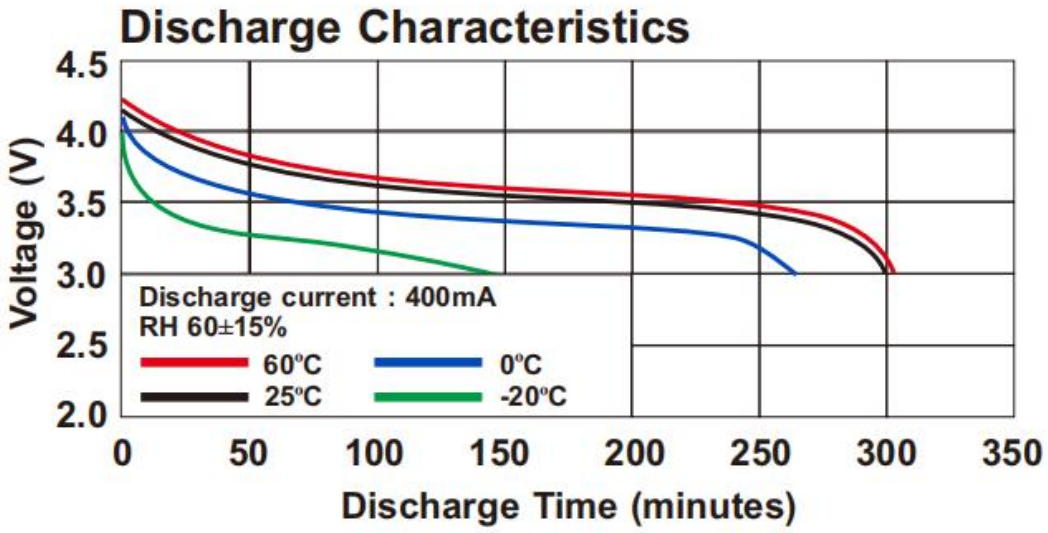

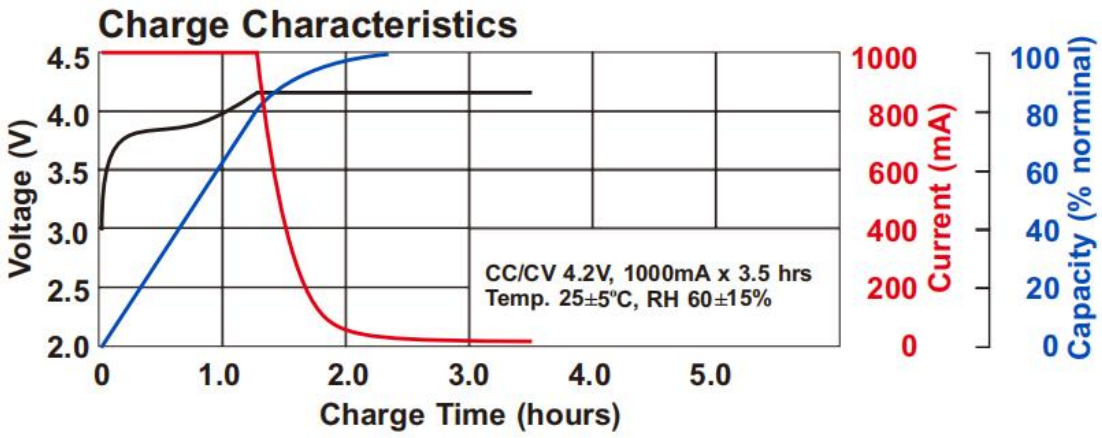

ANNOUNCEMENT

- The battery must be charged to an ambient temperature of 10°C~45°C.
- Never charge a lithium polymer battery pack that has been punctured or damaged in a crash.
- When the battery is empty, recharge it immediately. Do not store an empty battery, the battery will continue to discharge, it will fall below the minimum voltage and become unusable.
- Place batteries suspected of being damaged into the emergency battery isolation container and monitor temperature.
- Avoid purchasing low quality batteries to avoid accidents.
- Charge at correct rate and proper voltage for either use or storage.
- Always use a proper balance discharger when discharging your batteries
- During discharging and handling the batteries, do not exceed 160°F (71°C). Otherwise, the battery may be damaged and a fire may result.
- Set up dedicated charging area. Area must be free of combustible materials. Maintain space between charging batteries.
- Only ever use a charger specifically designed to charge Lithium Polymer cells. Failure to do so may a cause fire, which may result in personal injury and/or property damage.
- Do not charge hot cells after use. Warm cells are OK. Always let hot cells cool before charging.