3.7V Lithium Polymer Battery Data Sheet

Model: 452843

Please Find More:

https://www.fpbattery.com/3-7v-500mah-lithium-polymer-battery/

File Number: A/FP2843-12827

File Version: 01

CONTACT

CUSTOMER SERVICE
86.755.3682.7358
sales@fpbattery.com
Hours of Operation:
9:00am-6:00pm CST, Monday to Friday

LEARN MORE ON:
https://www.fpbattery.com/

DNK POWER COMPANY LIMITED

BATTERY SPECIFICATION

Part Number	DNK 452843
Nominal Voltage	3.7 V
Nominal Capacity	540 mAh
Internal Impedence	<60mΩ
Charge Voltage	4.2V
Recommended Charge Current	0.2 C
Allowed Max Charge Current	0.5 C
Output Voltage Range	4.2 - 2.5 V
Recommended Discharge Current	0.2 C
Max Continuous Discharge Current	1 C
Pulse Discharge Current	3 C (10 mS)
Discharge Cut-off Voltage	2.5± 0.05V
Cycle Life to 80% Health	500 (0.2C, 25°C)

1

1 YEAR WARRANTY

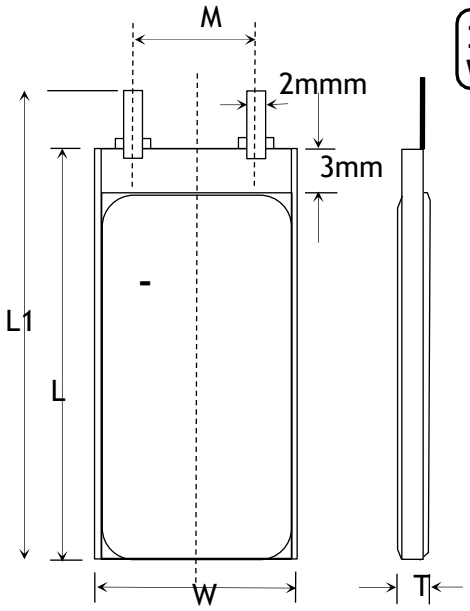

Item	Parameter (mm)
T	4
W	28
M	10
L	43
L_1	45
BL	45 ± 1
CL	100

ENVIRONMENTAL SPECIFICATIONS

Charging Temperature Range	0 - 45°C
Discharging Temperature Range	-20 - 60°C
Storage Period 1 Week	-20 - 45°C
Storage Period 1 Month	-10 - 45°C
Storage Period 6 Months	0 - 35°C

BATTERY PROTECTION

Over Charge	4.275 ± 50mV
Over Discharge	2.5V ± 50mV
Over Current	3A to 5A
Short Circuit	Yes

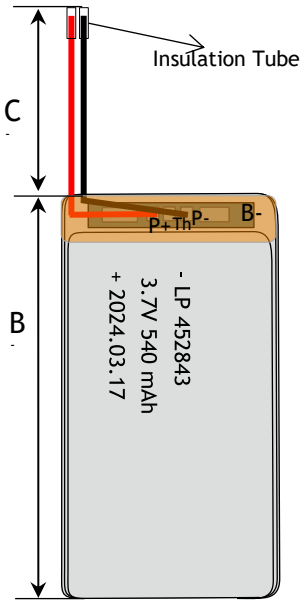

MECHANICAL SPECIFICATIONS

Dimensions	45x 28 x 4 mm(L*W*T)
Weight	Around 9 g
Battery Terminals	WC/ FL *

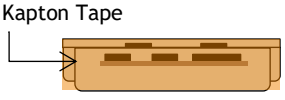

CERTIFICATION

Certification Approval	PLEASE CONSULT SALES

* WC=With Connector FL=Flying Leads UWP=Blue Wrapped PVC BWP=Black Wrapped PVC BC= Bare Cell

BULK PRODUCTION ACTUAL PICTURES



BARE CELL (BC)



FLYING LEADS (FL)



WITH CONNECTOR (WC)



BLUE WRAPPED PVC (UWP)



BLACK WRAPPED PVC (BWP)

3.7V LIPO BATTERY OPTIONS

Special Ingredients to make batteries work from -40 -85 ° C

Discharging Current up to 100C

Popular JST,Molex,Hirose,Anderson available





LED Power Indicator



Power Button

RELATIVE CURVES

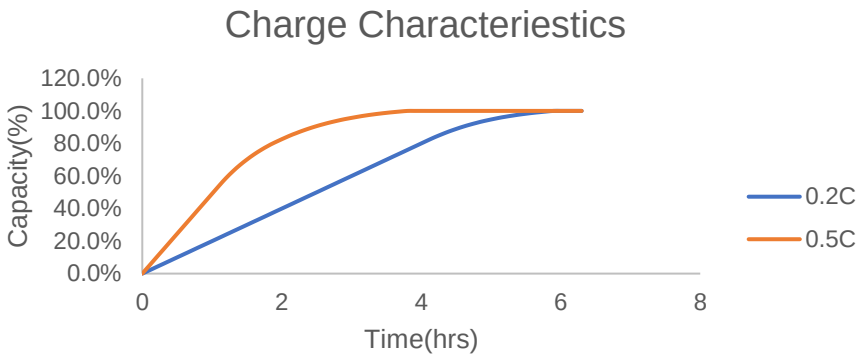

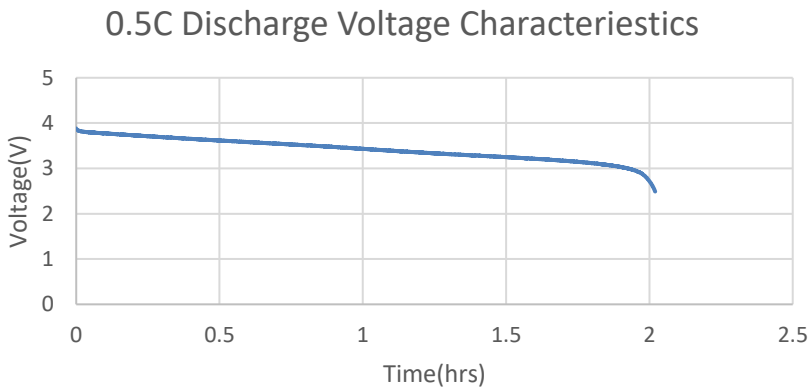

ANNOUNCEMENT

- Do not overcharge the battery and observe the charger and battery charge time instructions.
- Do not use the unit without its electronic management system.
- Before recycling your defective battery, it must be neutralized. Take a plastic container, fill it with water and add a lot of salt until the water becomes opaque. Place the LiPo battery in the water and leave for 24 hours. Check with a voltmeter that the voltage is 0.0V.
- Do not touch the battery to materials that are easily conductive.
- If you start seeing any physical changes to the battery while charging example puffing, STOP charging immediately and dispose of the battery responsibly.
- A 5s4p battery pack means that the pack contains 5 cells in a series circuit and 4 cells in a parallel circuit. Since each cell is 3.7v (nominal) a 5s LiPo battery has a nominal voltage of 18.5V, a fully charged voltage of 21.0V and a maximum discharged voltage of 15.0V before damage occurs.
- Store Li-Ion batteries and devices in dry, cool locations and in fire-resistant containers.
- Then recycle the battery according to the instructions of your country/region. Never dispose of a LIPO battery with domestic waste.
- Always charge batteries at a rate of 1c (one (times the capacity unless specified by the manufacturer
- Ensure that you purchase the right type and size of battery that matches the requirements of your equipment.
- Never charge a LiPo battery on a wooden or other combustible (carpeted) surface. Always charge LiPo batteries on surfaces made of cement, steel, ceramic or stone.